Plates No. G254 to No. G260

Replacement Parts for

Model 10
Highway Crossing Signal

Equipped with Type 3561 Mechanism

(Manufacture Discontinued)

See Section G, Part No. 3

For Mechanism Replacement Parts

Detail Parts for Model 10 Highway Crossing Signal

FLASHING LIGHT AND AUTOMATIC GATE ASSEMBLIES

Equipped with Type 3561 Mechanism
(Manufacture Discontinued)

REPLACEMENT PARTS

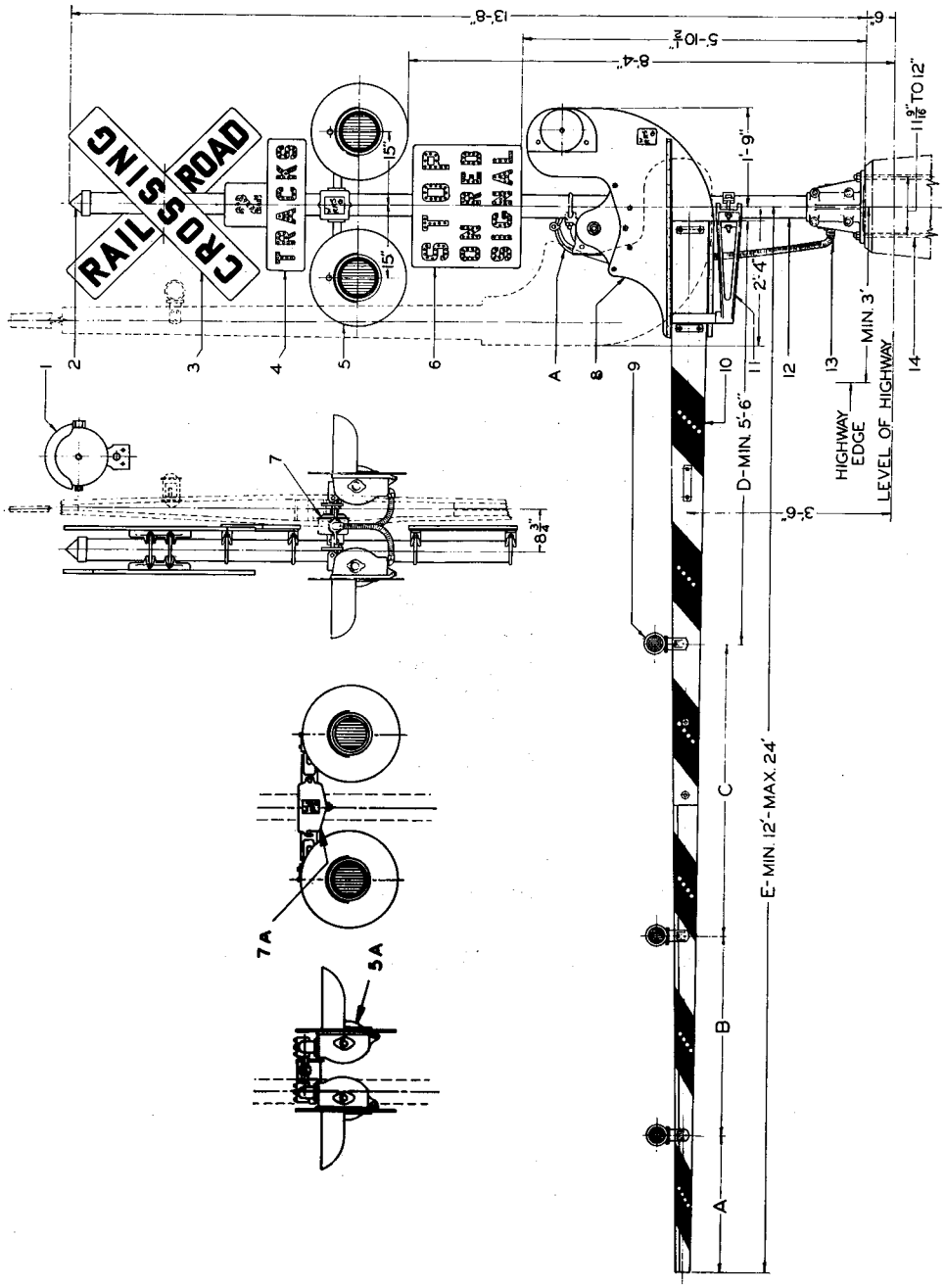

WESTERN RAILROAD SUPPLY COMPANY

Detail Parts for Model 10 Highway Crossing Signal

FLASHING LIGHT AND AUTOMATIC GATE ASSEMBLIES

Equipped with Type 3561 Mechanism
(Manufacture Discontinued)

REPLACEMENT PARTS

ORDERING REFERENCE

Specify Plate G254, Reference Number, Description and Piece Number

Ref. No.	Description	Piece No.
A	Left Hand Upper Quadrant, Type 3561-21GL Mechanism Only, (Specify whether for 4″ or 5″ I.D. Pipe Mounting) (For Details see Pl. G514)	3561-21GL
1	Crossing Bell for 4″ I.D. Pipe (For Details see Pl. B5)	222CR
1-A	Crossing Bell for 5″ I.D. Pipe (For Details see Pl. B5)	222FR
2	Pinnacle for 4″ I.D. Pipe	110-6
2-A	Pinnacle for 5″ I.D. Pipe	110-8
3	Railroad Crossing Sign, Cast Iron Type, for 4″ I.D. Pipe (For Details see Pl. H10)	3320-14
3-A	Railroad Crossing Sign, Cast Iron Type, for 5″ I.D. Pipe (For Details see Pl. H10)	3320-15
3-B	Railroad Crossing Sign, Reflector Type, Vitreous Enamel, for 4″ I.D. Pipe (For Details see Pl. H25)	3380-3
3-C	Railroad Crossing Sign Reflector Type, Vitreous Enamel, for 5″ I.D. Pipe (For Details see Pl. H25)	3380-3A
3-D	Railroad Crossing Sign, Reflector Type, Synthetic Enamel, for 4″ I.D. Pipe (For Details see Pl. H25)	3380-4
3-E	Railroad Crossing Sign, Reflector Type, Synthetic Enamel, for 5″ I.D. Pipe (For Details see Pl. H25)	3380-4A
4	"Number of Tracks" Sign, Cast Iron Type, for 4″ I.D. Pipe Specify Numeral, (For Details see Pl. H16)	16442-14
4-A	"Number of Tracks" Sign, Cast Iron Type, for 5″ I.D. Pipe Specify Numeral, (For Details see Pl. H16)	16442-15
4-B	"Number of Tracks" Sign, Reflector Type, Vitreous Enamel for 4″ I.D. Pipe Specify Numeral (For Details see Pl. H30)	3368-3
4-C	"Number of Tracks" Sign, Reflector Type, Vitreous Enamel, for 5″ I.D. Pipe Specify Numeral (For Details see Pl. H30)	3368-3A
4-D	"Number of Tracks" Sign, Reflector Type, Synthetic Enamel for 4″ I.D. Pipe Specify Numeral (For Details see Pl. H30)	3368-4
4-E	"Number of Tracks" Sign, Reflector Type, Synthetic Enamel, for 5″ I.D. Pipe Specify Numeral (For Details see Pl. H30)	3368-4A
5	Flashing Light Unit with 30° Horizontal Spread, 15° Down Deflecting Roundel Unless Otherwise Specified (For Details see Pl. D270). Other Roundels Available are Listed Below.	880-201
5-A	Flashing Light Unit with 30° Horizontal Spread, 15° Down Deflecting Roundel Unless Otherwise Specified (For Details see Pl. D370). Other Roundels Available are Listed Below.	950-201
6	"Stop on Red Signal" Sign, Vitreous Enamel, for 4″ I.D. Pipe (For Details see Pl. H30)	3366-3
6-A	"Stop on Red Signal" Sign, Vitreous Enamel, for 5″ I.D. Pipe (For Detail see Pl. H30)	3366-3A

Detail Parts for Model 10 Highway Crossing Signal

FLASHING LIGHT AND AUTOMATIC GATE ASSEMBLIES

Equipped with Type 3561 Mechanism
(Manufacture Discontinued)

REPLACEMENT PARTS
(Continued)

ORDERING REFERENCE

Specify Plate G254, Reference Number, Description and Piece Number

Ref. No.	Description	Piece No.
6-B	"Stop on Red Signal" Sign, Synthetic Enamel, for 4" I.D. Pipe (For Details see Pl. H30)	3366-4
6-C	"Stop on Red Signal" Sign, Synthetic Enamel, for 5" I.D. Pipe (For Details see Pl. H30)	3366-4A
7	Junction Box Cross Arm Assembly for Type 880-201 Lights (Specify whether 4" I.D. or 5" I.D. Pipe Mounting) (For Details see Pl. D270)	865-5
7-A	Junction Box Cross Arm Assembly for Type 950-201 Lights (Specify whether 4" I.D. or 5" I.D. Pipe Mounting) (For Details see Pl. G220)	950-5
8	Mounting Plate Assembly (Specify Length of Arm) (For Details see Pl. G258)	3561-13L
9	Gate Light, Two-Way Indication Type (For Details see Pl. G208)	1573-50
9-A	Gate Light, Fresnel Lens Type (For Details see Pl. G209)	1585
10	Roadway Arm Complete, Wired for Three Gate Lights, Less Gate Lights (For Details see Pl. G256)	3561-34L
10-A	Roadway Arm Complete, Less Wiring, Gate Lights and Reflector Buttons (For Details see Pl. G256)	3561-60
11	Stop Bracket Assembly for 4" I.D. Pipe (For Details see Pl. G260)	3561-14
11-A	Stop Bracket Assembly for 5" I.D. Pipe (For Details see Pl. G260)	3561-14A
12	Pipe Mast 4" I.D. x 12'10" Lg.	.....
12-A	Pipe Mast 5" I.D. x 12'10" Lg.	.....
12-B	Stub Pole Pipe Mast 4" I.D. x 6'0" Lg.	.....
12-C	Stub Pole Pipe Mast 5" I.D. x 6'0" Lg.	.....
13	Split Base for 4" I.D. Pipe (For Details see Pl. E190)	2143
13-A	Split Base for 5" I.D. Pipe (For Details see Pl. E190)	2145
13-B	Junction Box Clamp Type Base for 4" I.D. Pipe (For Details see Pl. E115)	2147-11
13-C	Junction Box Clamp Type Base for 5" I.D. Pipe (For Details see Pl. E115)	2148-11
14	Anchor Bolt, ¾" x 24" Lg., with Nut and Washer (For Details see Pl. E190)	.....

Note: Roundels Available for Flashing Lights Units are:
CL-17, 30° Horizontal Spread.
5319, 160° Horizontal Spread, 12° Down Deflection.
5321, 20° Deflecting.
5323, 30° Horizontal Spread, 15° Down Deflection.
5327, 20° Horizontal Spread, 32° Down Deflection.
5332, 70° Horizontal Spread.
5333, Diffusion-deflection Type, With Horizontal and Downward Spread.

MEMORANDA

WESTERN RAILROAD SUPPLY COMPANY

Roadway Arms 14' to 24' Long For Model 10 Signals

ASSEMBLIES AND REPLACEMENT PARTS

For Signal Assemblies Shown on Plate G254

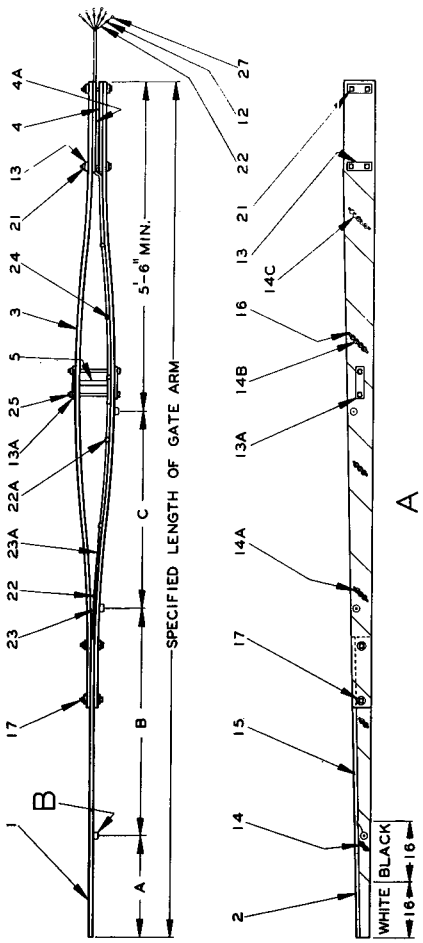

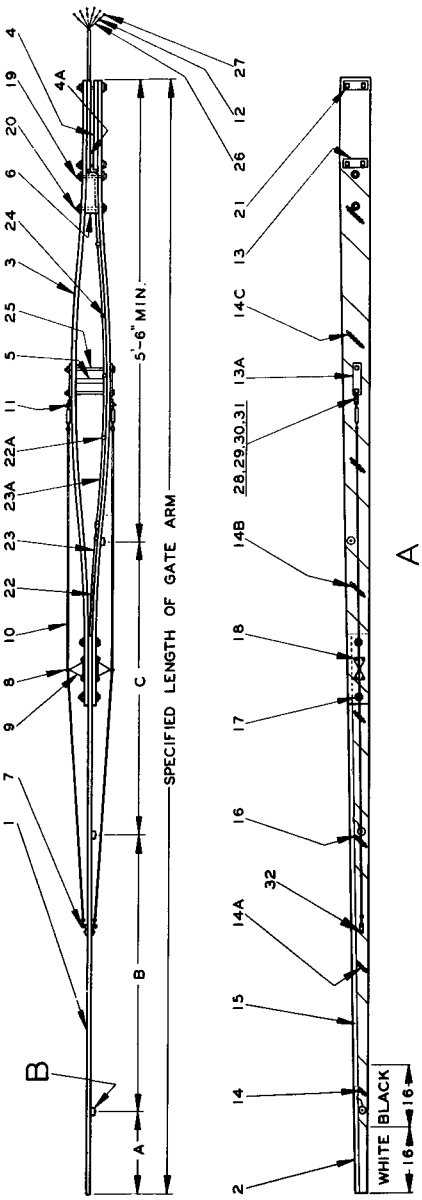

WESTERN RAILROAD SUPPLY COMPANY

Roadway Arms 14' to 24' Long For Model 10 Signals

ASSEMBLIES AND REPLACEMENT PARTS

For Signal Assemblies Shown on Plate G254

ORDERING REFERENCE

Specify Plate G256, Reference Number, Description and Piece Number

Ref. No.	Description	Piece No.
A	Assembly of Roadway Arm Complete with Wiring (Less Lights) (Specify Length of Roadway Arm and Dimensions "A", "B", "C")	3561-34L
A-1	Assembly of Roadway Arm Complete (Less Wiring, Lights and Reflector Buttons) (Specify Length of Roadway Arm)	3561-60
B	Assembly of Terminal Block (for Details see Pl. G200)	3561-196
1	Tongue (See Table)	.....
2	Reenforcing Channel (See Table)	.....
3	Side Board (See Table)	.....
4	Left Hand Filler Block	3561-24
5	Right Hand Filler Block	3561-25
6	Filler Block	3561-90
7	Hex. Nut 3/16"-24	.....
8	Retaining Clip	3561-54
9	Spanner Brace	3561-50
10	Cable Subassembly	3561-68
11	Bracket	3561-49A
12	Tag	5600-6
13	Washer Plate	3561-37
13A	Washer Plate	3561-37A
14	Crystal Reflector Button (2 Button Chain)	3562-170-2
14A	Crystal Reflector Button (3 Button Chain)	3562-170-3
14B	Crystal Reflector Button (4 Button Chain)	3562-170-4
14C	Crystal Reflector Button (5 Button Chain)	3562-170-5
15	Wood Screw #6 x 5/8" Lg. Rd. Hd. Brass (N.P.)	.....
16	Wood Screw #8 x 1/2" Lg. Theft Resisting, Brass (N.P.)	.....
17	Mach. Bolt 3/8"-16 x 3" Lg. Sq. Hd., Hex. Nut and Two Plain Washers	.....
18	Wood Screw, #10 x 1" Lg., Rd. Hd	.....
19	Mach. Bolt 3/8"-16 x 4 1/4" Lg. Sq. Hd., Hex. Nut and Two Plain Washers	.....
20	Mach. Bolt 3/8"-16 x 5" Lg. Sq. Hd., Hex. Nut and Two Plain Washers	.....
21	Mach. Bolt 3/8"-16 x 4 1/4" Lg. Sq. Hd., Hex. Nut and Lock Washer	.....
22	Clip for 3/8" Loom	3562-95
22A	Clip for 1/2" Loom	3562-96
23	3/8" Duroduct Loom (Specify Length)	.....
23A	1/2" Duroduct Loom (Specify Length)	.....
24	Wood Screw #12 x 3/4" Lg. Rd. Hd. Brass (N.P.)	.....
25	Mach. Bolt 3/8" x (See Table for Length)	.....
26	Wire #14, 2/64, 30% S.C. Flex. S.B., W. P. Finish, 19/.0147 (Specify Length)	90913
27	Terminal	31906

Roadway Arms 14' to 24' Long For Model 10 Signals

ASSEMBLIES AND REPLACEMENT PARTS

For Signal Assemblies Shown on Plate G254
(Continued)

ORDERING REFERENCE

Specify Plate G256, Reference Number, Description and Piece Number

Ref. No.	Description	Piece No.
28	Mach. Bolt 3/16"-24 x 1¼" Lg. Hex. Hd., Hex. Nut and Washer	
29	Mach. Screw, #10-24 x 1½" Lg., Rd. Hd., Hex. Nut and Plain Washer	
30	Hex. Nut #10-24	
31	Hex. Nut #10-24, Left Hand Thread	
32	Hex. Nut, 3/16"-24	

Table

Specified Length of Gate Arm	Tongue	Reenforcing Channel	Sideboard	Spacer Bolt
14'	3561-45	3561-64B	3561-44	5¼"
16'	3561-57	3561-64B	3561-56	5¾"
18'	3561-28	3561-64	3561-26	6¼"
20'	3561-59	3561-64	3561-58	7¼"
24'	3561-47	3561-63	3561-46	10"

Note: For intermediate gate lengths not listed, always choose next larger length.

WESTERN RAILROAD SUPPLY COMPANY

Left Hand Mounting Plate For Model 10 Signals

ASSEMBLIES AND REPLACEMENT PARTS

For Signal Assemblies Shown on Plate G254

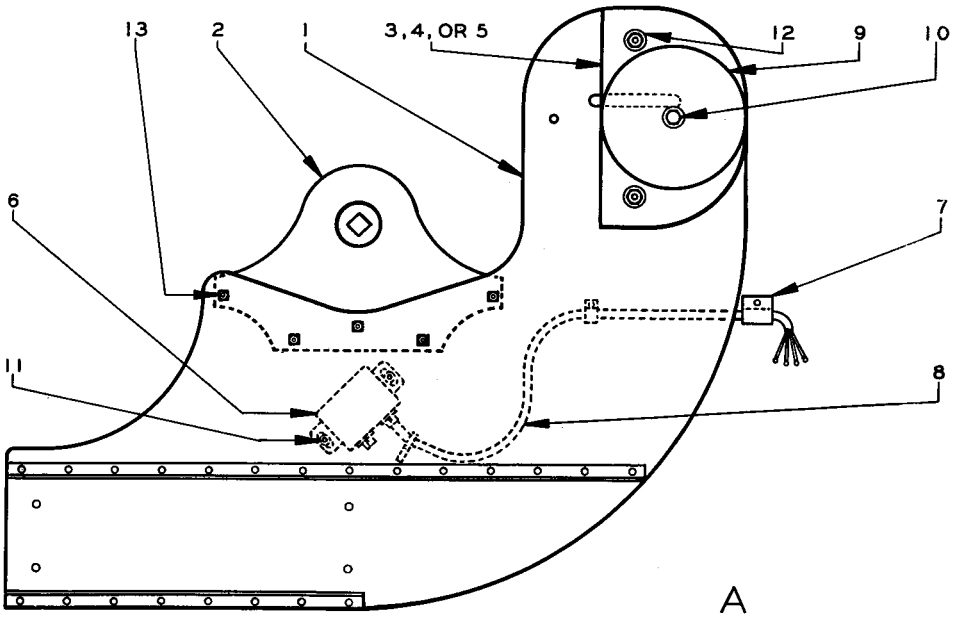

ORDERING REFERENCE

Specify Plate G258, Reference Number, Description and Piece Number

Ref. No.	Description	Piece No.
A	Left Hand Mounting Plate, Complete as Shown (Specify Length of Roadway Arm)	3561–13L
A-1	Left Hand Mounting Plate Complete, Less Items 3, 4, 5, 9, 10 and 12	3561–13LA
1	Left Hand Mounting Plate with Guide Angles Only	3561–84
2	A.A.R. Spectacle Hub	T-21050–A
3	75 Lb. Weight	3561–40
4	51 Lb. Weight	3561–41
5	12.5 Lb. Weight	3561–43
6	Junction Box Assembly	3561–71
7	Retaining Clip for Cable	3561–72
8	Cable Subassembly	3561–74
9	Disc (1/8″ Thick)	3561–42
10	Cap Screw, 1/2″-13 x (Specify Length), Hex. Hd	.....
11	Cap Screw, 5/16″-18 x 3/4″ Lg., Hex. Hd. and Plain Washer	.....
12	Mach. Bolt, 1/2″-13 x (Specify Length), Hex. Hd. and 2 Plain Washers	.....
13	Mach. Bolt, 3/8″-16 x 1 1/4″ Lg., Sq. Hd., Hex. Nut, and Lock Washer	.....

Stop Bracket
For Model 10 Signals

ASSEMBLIES AND REPLACEMENT PARTS
For Signal Assemblies Shown on Plate G254

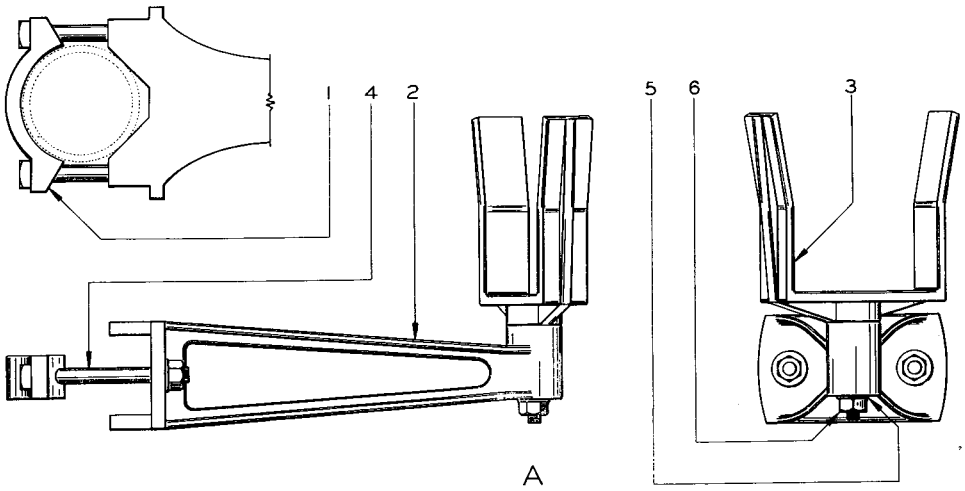

ORDERING REFERENCE
Specify Plate G260, Reference Number, Description and Piece Number

Ref. No.	Description	Piece No.
A	Stop Bracket Assembly Complete (For 5″ Pipe Mounting)	3561–14A
A-1	Stop Bracket Assembly Complete (For 4″ Pipe Mounting)	3561–14
1	Mounting Clamp for 5″ I.D. Pipe	3561–92
1A	Mounting Clamp for 4″ I.D. Pipe	3561–93
2	Arm for Stop Bracket	3561–15
3	Guide	3561–22
4	Mach. Bolt, ¾″-10 x 7½″ Lg., Sq. Hd., Hex. Nut and Plain Washer (For 5″ Pipe Mounting)	.....
4A	Mach. Bolt, ¾″-10 x 6½″ Lg., Sq. Hd., Hex. Nut and Plain Washer (For 4″ Pipe Mounting)	.....
5	Plain Steel Washer, ⅝″	.....
6	Steel Hex. Nut 1⅝″-11	.....

Catalog Section G, Part No. 2
Issue of 1951

Printed in U. S. A.
3M—1951
15C 1959

Section

G

Part No. 5

Highway Crossing Gates

Mechanism Replacement Parts

WESTERN RAILROAD SUPPLY COMPANY

MANUFACTURERS

General Offices and Factory

2360 South Ashland Avenue

Chicago, Illinois

District Offices in

New York, N. Y. Houston, Tex. Cleveland, Ohio

Printed in U.S.A.

1M - 1942
1M - 1947

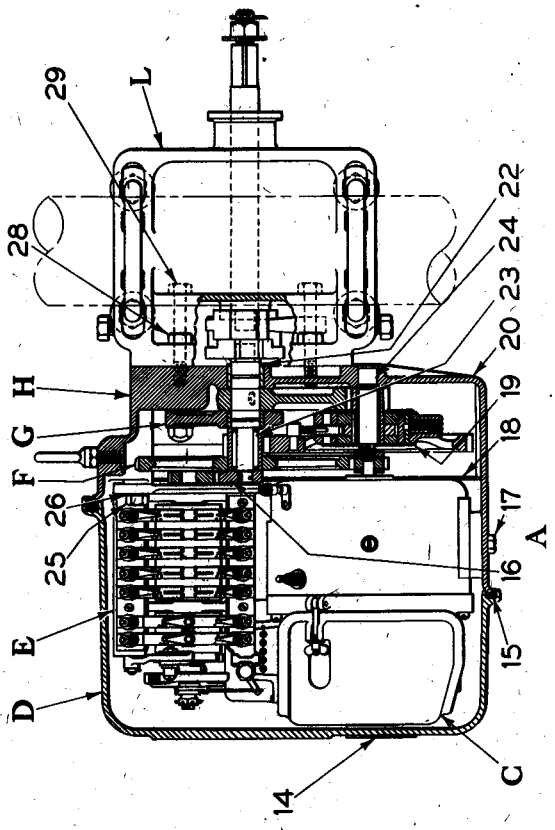

CROSSING GATE MECHANISM
WITH CLAMP BEARING

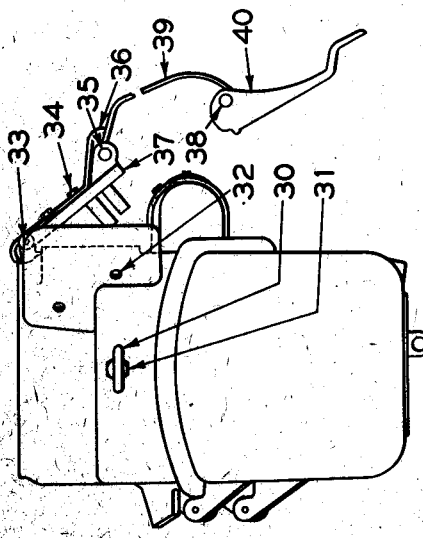

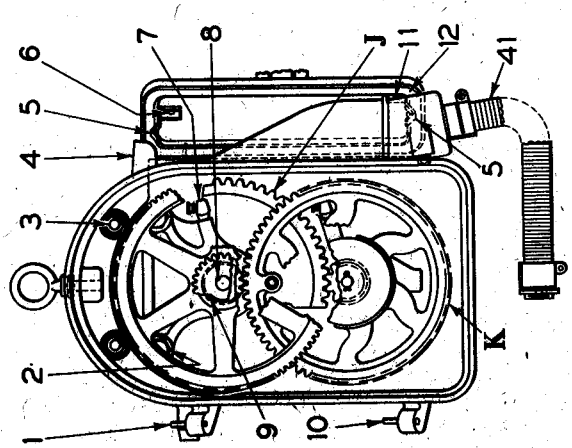

August 1942 WESTERN RAILROAD SUPPLY COMPANY

CROSSING GATE MECHANISM WITH CLAMP BEARING

Drawing references are shown for convenience in checking shipping lists and invoices

Fig. No.	Description	Drawing Reference
	Order by plate, figure number and description	
A	Mechanism Complete, with clamp bearing, for 0° to 90° L.H.U.Q. Crossing Gate Mechanism, for mounting on 5" pipe. Equipped with motor without centrifugal brake or without contacts operated by hold-clear armature as shown on Plate G-534. Gear ratio 131 to 1	3561-21 GL-90
A1	as above, except for 0° to 90° R.H.U.Q. Crossing Gate Mechanism	3561-21 GR-90
A2	same as Fig. A, except for 0° to 80° L.H.U.Q. Crossing Gate Mechanism	3561-21 GL-80
A3	same as Fig. A, except for 0° to 80° R.H.U.Q. Crossing Gate Mechanism	3561-21 GR-80
A4	same as Fig. A, except for 0° to 75° L.H.U.Q. Crossing Gate Mechanism	3561-21 GL-75
A5	same as Fig. A, except for 0° to 75° R.H.U.Q. Crossing Gate Mechanism	3561-21 GR-75
C	Motor Complete, 8-10 volts. For details and order references see Plate G-534	29890-1 Gr. 12
D	Cover Complete, includes name plate and gasket . .	52993 Gr. 1
E	Circuit Controller Complete. For details and order references see Plate G-520	
F	First Intermediate Gear Complete. For details and order references see Plate G-528 Fig. E	29965 Gr. 1
G	Bearing Bracket Complete. For details and order references see Plate G-528 Fig. D	29833 Gr. 1
H	Case Complete, includes all parts except circuit controller, motor, brake, and bearing	29821 Gr. 8
H1	as above, except without stop Fig. 36.	29821 Gr. 1
J	Sector Complete. For details and order references see Plate G-528 Fig. B	54240 Gr. 1
K	Ratchet Gear Complete. For details and order references see Plate G-526 Fig. D	30080-1 Gr. 1
L	Clamp Bearing Complete, left hand, for 5" pipe. For details and order references see Plate G-526 Fig. A	3561-155 L-5

CROSSING GATE MECHANISM WITH CLAMP BEARING

Drawing references are shown for convenience in checking shipping lists and invoices

Fig. No.	Description	Drawing Reference
	Order by plate, figure number and description	
L1	as above, except right hand. For details and order references see Plate G-526 Fig. B	3561-155 R-5
1	Stud, upper, hinge for door	16114
2	Dowel Screw, 5/8"-11 x 1-7/8" hex. hd., for mounting bearing bracket Fig. G.	29849
3	Stud, 1/2"-13 x 2-1/8" lg., for mounting circuit controller	14934
4	Shield, for side door	30520
5	Latch, for side door	42018
6	Rivet, 3/16" x 1/2" rd. hd., for fastening latch to top of side door	0204
7	Oiler Complete, as shown, includes adapter	34232-16 Gr. 1
8	Woodruff Key, for fastening sector Fig. 16 to shaft	027
9	Cotter Pin, 3/16" x 2", for fastening sector Fig. 16 to shaft	046
10	Stud, lower, hinge for door	29869
11	Rivet, 3/16" x 3/8" rd. hd., for fastening latch to bottom of side door	0203
12	Gasket, 2' 7-5/8" lg., for side door	43460
14	Name Plate, with drive screws, for mechanism	401-237 52681-12
15	Gasket, 4' 6-1/4" lg., for cover Fig. D	43460
16	Sector, only, for operating circuit controller	29842
17	Screw, 3/8"-16 x 1-3/8" hex. hd., for mounting motor	30049
18	Partition, for case	30041
19	Washer, for gear Fig. K	30089
20	Case, only	29822
22	Bushing, for sector shaft in case Fig. 20	29835
23	Roller Bearing, for first intermediate gear Fig. F.	29998 Gr. 2
24	Stud Complete, for gear Fig. K, includes pin.	52923 Gr. 1
25	Nut, 1/2"-13 x 7/16" hex., for stud Fig. 3	0286

CROSSING GATE MECHANISM WITH CLAMP BEARING

Drawing references are shown for convenience in checking shipping lists and invoices

Fig. No.	Description	Drawing Reference
	Order by plate, figure number and description	
26	Washer, for nut Fig. 25.	17492
28	Tap Bolt, 5/8"-11 x 1-3/4" hex. hd., for fastening clamp bearing to mechanism	0664
29	Tap Bolt, 5/8"-11 x 4" hex. hd., for fastening clamp bearing to mechanism	34675
30	Eyebolt, 1/2"-13, for use when lifting mechanism .	2102
31	Nut, 1/2"-13 x 5/16" th. hex., for eyebolt.	41895
32	Screw, 1/4"-24 x 1/2" rd. hd., for mounting shield Fig. 4	2449
33	Stud, hinge, for side door	21527
34	Screw, 1/4"-20 x 7/8" hex. hd., with hex. nut and lock washer, for fastening stop Fig. 36 to side door	29767 424 0510
35	Pin, for fastening strap Fig. 39 to side door	7567
36	Stop, for side door	52971-4
37	Side Door, only	30040-2
38	Pin, for fastening strap Fig. 39 to hasp tongue . . .	7005
39	Strap, for hasp tongue.	30804-1
40	Hasp Tongue, for door	16110
41	Conduit Adapter Complete, as shown.	3561-79

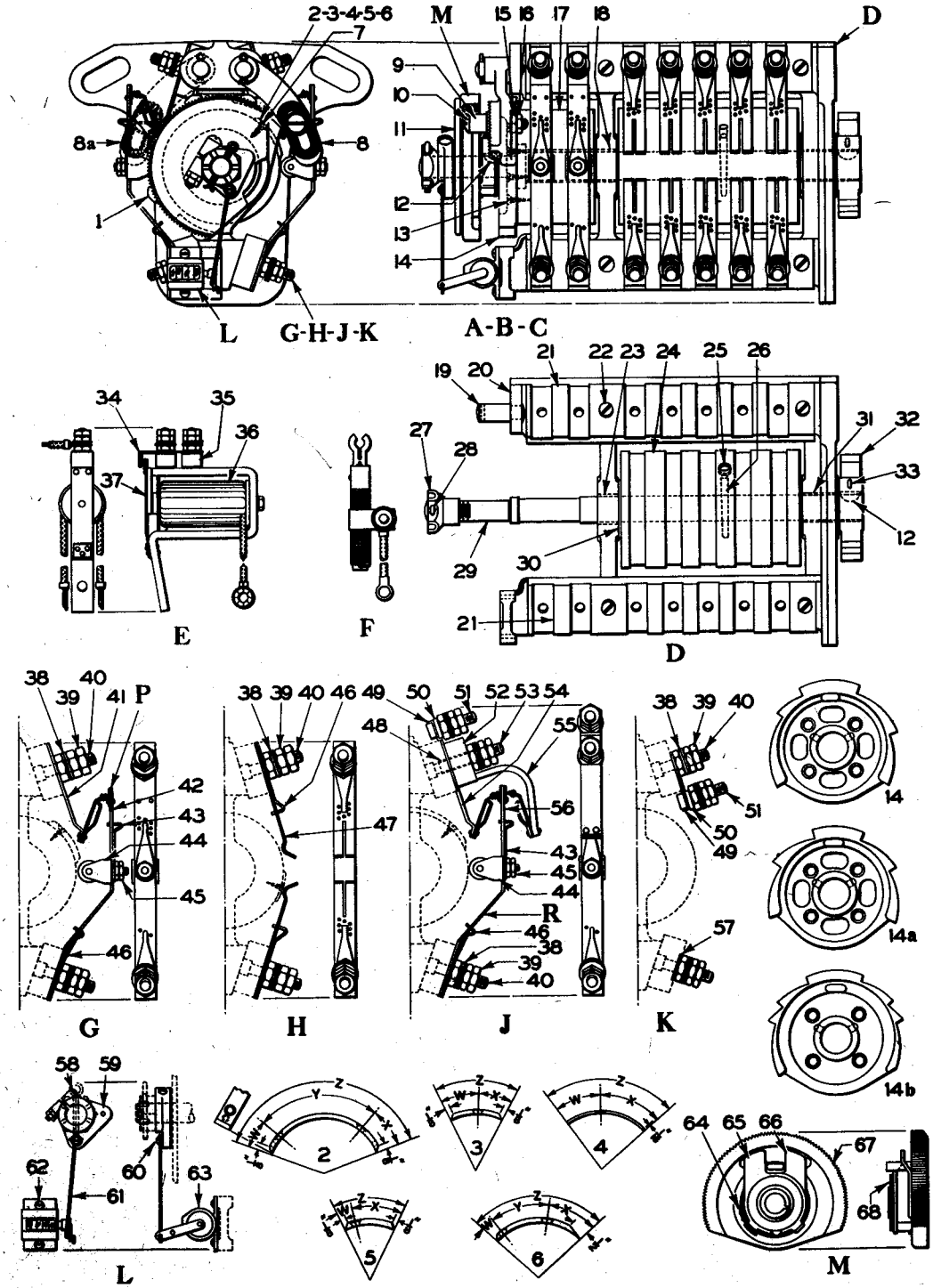

CIRCUIT CONTROLLERS

CIRCUIT CONTROLLERS

Drawing references are shown for convenience in checking shipping lists and invoices

Fig. No.	Description	Drawing Reference
	Order by plate, figure number and description	
A	Circuit Controller Complete, 0°-90° operation, for L.H.U.Q. mechanism. This controller is for use with typical circuit 25941-12 . . . . . (Note - Typical circuit is shown inside cover Fig. D, Plate G-510)	
A1	as above, except for use with typical circuit 25941-11	
A2	same as Fig. A, except for use with typical circuit 25941-7	
A3	same as Fig. A, except for R.H.U.Q. mechanism, for use with typical circuit 25941-7.	
B	Circuit Controller Complete, 0°-80° operation, for L.H.U.Q. mechanism. This controller is for use with typical circuit 25941-7. . . . . (Note - Typical circuit is shown inside cover Fig. D, Plate G-514)	
B1	as above, except for R.H.U.Q. mechanism, and for use with typical circuit 25941-7	
C	Circuit Controller Complete, 0°-75° operation, for L.H.U.Q. mechanism. This controller is for use with typical circuit 25941-7. . . . . (Note - Typical circuit is shown inside cover Fig. D, Plate G-514)	
C1	as above, except for R.H.U.Q. mechanism, for use with typical circuit 25941-7.	
D	Frame Complete, for circuit controller.	34614 Gr. 2
E	Snubbing Relay Complete, for circuit controller . .	56790 Gr. 2
F	Snubbing Resistor Complete, for circuit controller	56850
G	Operating Contact Group Complete, as shown	39927-2 Gr. 2
H	Contact Group Complete, as shown	39927 Gr. 3
J	Contact Group Complete, as shown	39927-5 Gr. 3
K	Binding Post Group Complete, as shown	39927-10 Gr. 3
L	Counter Complete, as shown	38408 Gr. 1
M	Trip Plate Complete, as shown.	34616 Gr. 1
P	Arm Complete, for contact group Fig. G, includes 1-42, 1-43, 1-44, and 2-45.	35321-2 Gr. 2

CIRCUIT CONTROLLERS

Drawing references are shown for convenience in checking shipping lists and invoices

Fig. No.	Description	Drawing Reference
	Order by plate, figure number and description	
R	Arm Complete, for contact group Fig. J, includes 1-43, 1-44, 2-45, and 1-56.	35321-2 Gr. 1
1	Trip Finger, for tripping latch arm.	34655
2	Segments, for use with Fig. H } See table at end of this list for segments.	
3	Segments, for use with Fig. H	
4	Segments, for use with Fig. J	
5	Segments, for use with Fig. G or J	
6	Segments, for use with Fig. G	
7	Wood Screw, No. 6 x 1/2" fl. hd., for fastening segments to commutator	30127
7a	as above, except No. 6 x 1/2" spl. hd., for fastening segments to commutator	44734
7b	same as Fig. 7, except No. 8-32 x 3/16" rd. hd., for segment Fig. 2h only	2553-5
8	Trip Arm, right hand, for clockwise rotation	30029-9
8a	as above, except left hand, for counter-clockwise rotation	30029-10
9	Knob, for trip arm.	29969
10	Screw, No. 14-24 x 1-3/8" rd. hd., for fastening knob to trip arm	50636
11	Plate, for trip finger	34651
12	Woodruff Key No. 3, for fastening trip plate to shaft also for fastening sector Fig. 32 to shaft	027
13	Screw, No. 8 x 1-1/2" fl. hd., for fastening latch plate to commutator	43669
14	Latch Plate, for trip finger, for clockwise rotation, for mechanisms shown on Plates G-512 and G-514.	34676
14a	as above, except for counter-clockwise rotation . .	34678
14b	same as Fig. 14, except for clockwise rotation, used on drive-down mechanism shown on Plate G-510. .	34649-1
15	Nut, No. 14-24 sq., for screw Fig. 10	48570
16	Nut, No. 14-24 hex., for screw Fig. 10.	46989
17	Commutator, 2 way, for circuit controller	34652

CIRCUIT CONTROLLERS

Drawing references are shown for convenience in checking shipping lists and invoices

Fig. No.	Description	Drawing Reference
	Order by plate, figure number and description	
18	Bushing, for commutator	29977
19	Stud, for trip arms Figs. 8 and 8a	34657
20	Frame, only	34648
21	Contact Block, only	43273-4
22	Screw, No. 10-32 x 5/8" rd. hd., for mounting contact blocks Fig. 21	2784
23	Bushing, as shown, for shaft Fig. 29	34663
24	Commutator, five way, for circuit controller	29972
25	Set Screw, 5/16"-18 x 1/4", for locking pin Fig. 26	3018-2
26	Taper Pin, #4 x 2" lg., for fastening commutator Fig. 24 to shaft	48650-1
27	Castle Nut, for shaft Fig. 29	34659
28	Cotter Pin, 1/8" x 1-1/4", for nut Fig. 27	041
29	Shaft, only, for circuit controller	34647-1
30	Washer, for use between frame and commutator Fig. 24	35133
31	Bushing, as shown, for shaft	29850
32	Sector, for operating circuit controller	34646
33	Cotter Pin, 3/16" x 1-3/4", for fastening sector to shaft	045
34	Support Complete, with contact, for relay Fig. E	51320-51 Gr. 1
35	Insulator, for support Fig. 34	42792-3
36	Coil, for relay Fig. E	50529-41 Gr. 1
37	Armature Complete, for relay Fig. E, includes plate and pins for fastening to frame	29524-28 Gr. 1 35845-75 0677
38	Washer, for terminal posts	1225-2
39	Nut, No. 14-24, hex., for terminal posts	42839-1
40	Screw, No. 14-24 x 1-1/4" sq. hd., used as terminal post	350-1
41	Arm Complete, for contact group Fig. G, includes support, stop, and contact riveted together	35466-2 Gr. 2

CIRCUIT CONTROLLERS

Drawing references are shown for convenience in checking shipping lists and invoices

Fig. No.	Description	Drawing Reference
	Order by plate, figure number and description	
42	Contact Spring, with contact, for arm Fig. P.	35330-2 Gr. 2
43	Adjuster, for contact springs Figs. 42 and 56	29967-1
44	Holder Complete, with stud, roller and pin.	42470 Gr. 1
45	Nut, No. 8-32, hex., for stud on holder.	9188
46	Adjuster, for arm Figs. P and R, also for spring Fig. 47.	29967
47	Spring, only, for contact group Fig. H	29966
48	Bushing, for screw Fig. 53	38471-1
49	Connector, for contact groups Figs. J and K	46413-7
50	Washer, for connector Fig. 49	1225-117
51	Screw, No. 14-24 x 1" sq. hd., used as terminal post.	350
52	Block, insulating, for finger Fig. 55	38470-1
53	Screw, No. 14-24 x 1-3/4" sq. hd., used as terminal post.	350-5
54	Arm Complete, for contact group Fig. J, includes support, stop and contact riveted together	35466-2 Gr. 1
55	Arm Complete, for contact group Fig. J, includes support, stop and contact riveted together	35466-3 Gr. 1
56	Contact Spring, with contacts, for arm Fig. R. . . .	35330-2 Gr. 1
57	Washer, as shown, for contact group Fig. K	8148
58	Screw, No. 10-32 x 1-1/4" rd. hd., with hex. nuts, for fastening clamp Fig. 59 to nut Fig. 27.	3044-16 38239
59	Clamp, only, for counter.	34660
60	Screw, No. 6-32 x 3/8" rd. hd., for fastening rod Fig. 61 to clamp	2426-8
61	Rod, only, for operating counter.	34666
62	Screw, No. 4-36 x 3/8" rd. hd., for fastening counter to frame.	29107
63	Counter, only, right hand.	26674
64	Spring, for trip plate	34618
65	Plate Complete, with stud, for spring Fig. 64	34619 Gr. 1

CIRCUIT CONTROLLERS

Drawing references are shown for convenience in checking shipping lists and invoices

Fig. No.	Description	Drawing Reference
	Order by plate, figure number and description	
66	Plate, only, for trip plate	34617-1
67	Trip Plate, only.	34650-1
68	Washer, for spring.	35133

SEGMENTS

Fig. No.	Dim. W	Dim. X	Dim. Y	Dim. Z	Thickness of Segment	Drawing Reference
2	21/32" 25°	33/64" 20°	1-11/64" 45°	2-11/32" 90°	.1019"	29990-2
2a	55/64" 33°	1-3/64" 40°	1-11/64" 45°	3-5/64" 118°	.1019"	29990-3
2b	55/64" 33°	1-19/64" 50°	1-11/64" 45°	3-21/64" 128°	.1019"	29990-4
2c	15/32" 18°	23/32" 27-1/2°	2-11/32" 90°	3-17/32" 135-1/2°	.1019"	29990-10
2d	9/32" 11°	63/64" 37-1/2°	1-11/64" 45°	2-7/16" 93-1/2°	.1019"	29990-11
2e	25/32" 30°	1-19/64" 50°	2-11/32" 90°	4-27/64" 170°	.1019"	29990-19
2f	17/64" 10°	23/32" 27-1/2°	2-11/32" 90°	3-21/64" 127-1/2°	.1019"	29990-25
2g	3/8" 14-1/2°	3/8" 14-1/2°	2-11/32" 90°	3-3/32" 119°	.1019"	29990-54
2h*	15/32" 18°	23/32" 27-1/2°	2-11/32" 90°	3-17/32" 135-1/2°	.1019"	29990-57

* Has additional tapped hole as shown by dotted lines.

NOTE: All dimensions based on outside circumference.

CIRCUIT CONTROLLERS

Drawing references are shown for convenience in checking shipping lists and invoices

Order by plate, figure number and description

SEGMENTS (Cont'd.)

Fig. No.	Dim. W	Dim. X	Dim. Y	Dim. Z	Thickness of Segments	Drawing Reference
3	21/32"	1-3/64"		1-11/16"	.1019"	29990-6
	25°	40°		65°		
3a	19/32"	19/32"		1-11/64"	.1019"	29990-7
	22-1/2°	22-1/2°		45°		
3b	21/64"	31/32"		1-19/64"	.1019"	29990-9
	12-1/2°	37-1/2°		50°		
3c	15/32"	1-1/4"		1-23/32"	.1019"	29990-12
	18°	48°		66°		
3d	21/32"	23/32"		1-3/8"	.1019"	29990-13
	25°	27-1/2°		52-1/2°		
3e	25/64"	19/32"		63/64"	.1019"	29990-14
	15°	23°		38°		
3f	7/8"	7/8"		1-3/4"	.1019"	29990-20
	33-1/2°	33-1/2°		67°		
3g	55/64"	1-19/64"		2-5/32"	.1019"	29990-23
	33°	50°		83°		
3h	21/32"	29/32"		1-9/16"	.1019"	29990-59
	25°	35°		60°		
4	7/8"	1-1/4"		2-1/8"	1/16"	29990-62
	35°	49°		84°		
5	21/64"	1"		1-21/64"	1/8"	29990-15
	12-1/2°	37-1/2°		50°		
5a	21/64"	1-1/8"		1-29/64"	1/8"	29990-16
	12-1/2°	42-1/2°		55°		
5b	15/32"	1-17/64"		1-3/4"	1/8"	29990-17
	18°	48°		66°		
6	17/64"	1-1/16"	1-3/16"	2-33/64"	1/8"	29990-18
	10°	40°	45°	95°		

NOTE: All dimensions based on outside circumference.

MEMORANDUM

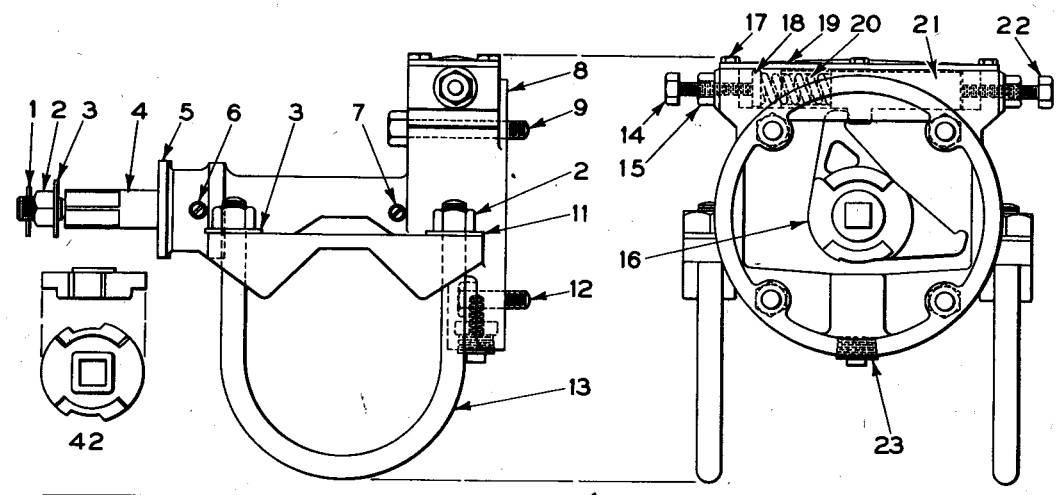

A

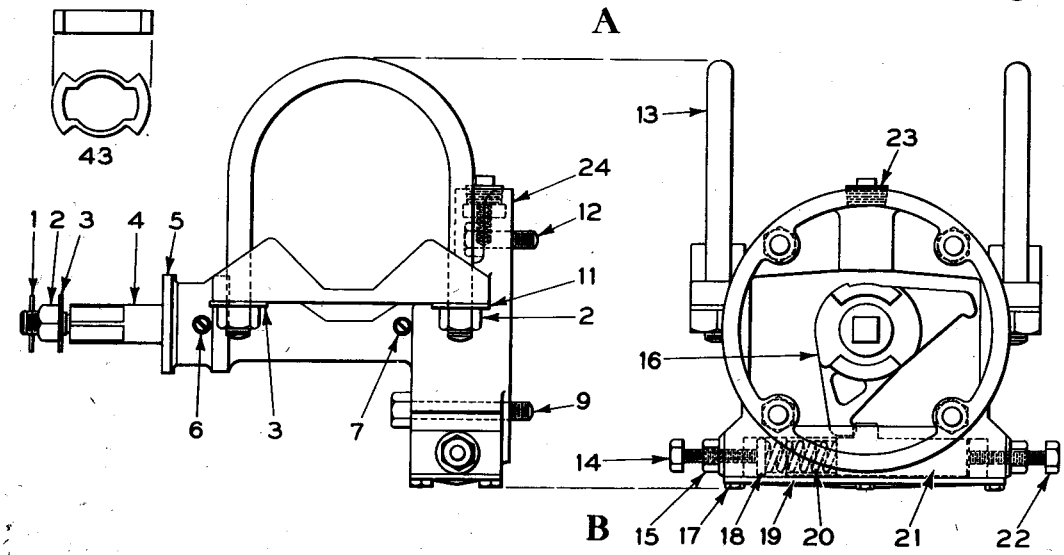

B

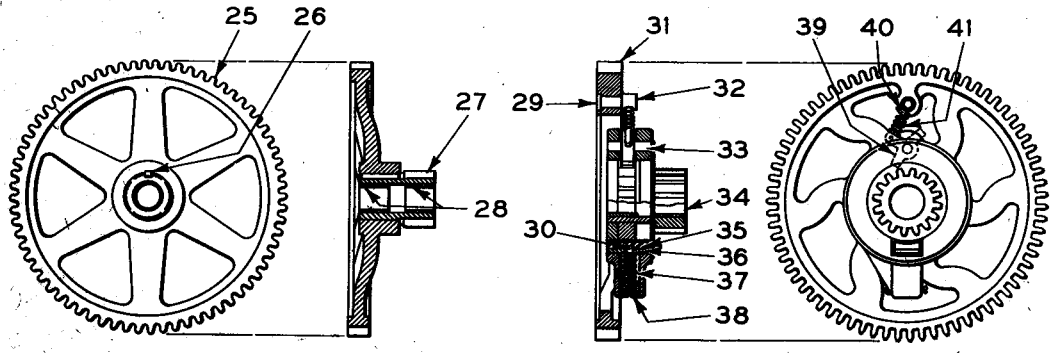

C D

DETAIL PARTS FOR MECHANISMS

DETAIL PARTS FOR MECHANISMS

Drawing references are shown for convenience in checking shipping lists and invoices

Fig. No.	Description	Drawing Reference
	Order by plate, figure number and description	
A	Clamp Bearing Complete, left hand, for 5" pipe, includes drivers Figs. 42 and 43.	3561-155 L-5
A1	as above, except for 4" pipe	3561-155 L-4
A2	same as Fig. A, except for 6" pipe.	3561-155 L-6
B	Clamp Bearing Complete, right hand, for 5" pipe, includes drivers Figs. 42 and 43.	3561-155 R-5
B1	as above, except for 4" pipe	3561-155 R-4
B2	same as Fig. B, except for 6" pipe.	3561-155 R-6
C	Second Intermediate Gear Complete, as shown, 72 teeth, with pinion having 10 teeth, for mechanism shown on Plate G-510.	29964-1 Gr. 2
D	Ratchet Gear Complete, as shown, for mechanisms shown on Plates G-512 and G-514.	30080-1 Gr. 1
1	Cotter Pin, for end of shaft	044
2	Nut, 3/4"-10 hex., for end of shaft, also for "U" bolt.	0272
3	Washer, for nut Fig. 2, also for "U" bolt.	073
4	Shaft, only, for bearings	30272
5	Cap, for bearings.	35129
6	Oiler, as shown, for shaft	39886
7	Oiler, as shown, for shaft	44793
8	Bearing, only, for bearing Fig. A	34670
9	Tap Bolt, 5/8"-11 x 4" hex. hd., for fastening bearing to mechanisms.	34675
11	Washer, for "U" bolt.	35660
12	Tap Bolt, 5/8"-11 x 1-3/4" hex. hd., for fastening bearing to mechanism.	0664
13	"U" bolt, for 5" pipe	29953
13a	as above, except for 4" pipe	29952
13b	same as Fig. 13, except for 6" pipe	30017
14	Tap Bolt, 5/8"-11 x 2-1/4" hex. hd., for buffer stop	0884
15	Nut, 5/8"-11 hex., for bolts Figs. 14 and 22	1318

DETAIL PARTS FOR MECHANISMS

Drawing references are shown for convenience in checking shipping lists and invoices

Fig. No.	Description	Drawing Reference
	Order by plate, figure number and description	
16	Driver, only, for shaft	34672
17	Tap Bolt, 5/16"-18 x 3/4" hex. hd., for fastening plate Fig. 19 to bearing	0844
18	Filler, for spring Fig. 20	34674
19	Plate, for bearings	34673
20	Spring, for plunger Fig. 21	30982
21	Plunger, for buffer stop	34671
22	Tap Bolt, 5/8"-11 x 2-1/2" hex. hd., for plunger Fig. 21	0719
23	Pipe Plug, for bearings	0888
24	Bearing, only, for bearing Fig. B	34670-1
25	Gear, only, 72 teeth, for gear Fig. C	29831-2
26	Key, 3/16" x 3/16" x 1-1/4", for fastening pinion to gear	1153
27	Pinion, only, 10 teeth, for gear Fig. C	29840-1
28	Bushing, for gear, two required	6714-232
29	Collar, for stud Fig. 32	30083
30	Stud, for spring Fig. 37	441-227
31	Gear, only, for ratchet gear Fig. D	30081
32	Stud, for spring Fig. 41	30084
33	Pin, 3/8" x 1-3/8", for fastening pawl Fig. 39 to gear	30521
34	Pinion Complete, for gear Fig. D, includes ratchet wheel, bushings, key and washers	30079
35	Brake Shoe, for gear Fig. D	30086-1
36	Backing Plate, for brake shoe	30085-1
37	Spring, for brake shoe	30090
38	Screw, 5/8"-11 x 1/2" headless, for spring Fig. 37	35966
39	Pawl Complete, for ratchet gear Fig. D, includes rod for spring Fig. 41	42438
40	Washer, for spring Fig. 41	5046-1

DETAIL PARTS FOR MECHANISMS

Drawing references are shown for convenience in checking shipping lists and invoices

Fig. No.	Description	Drawing Reference
	Order by plate, figure number and description	
41	Spring, for pawl Fig. 39	30875
42	Machine Driver, as shown	34627
43	Intermediate Driver, as shown	29911

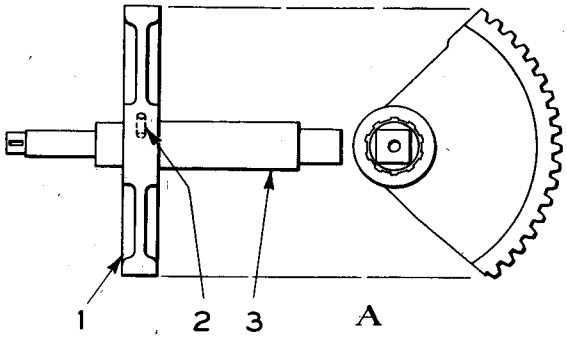

A

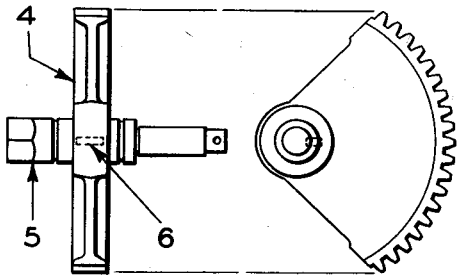

B

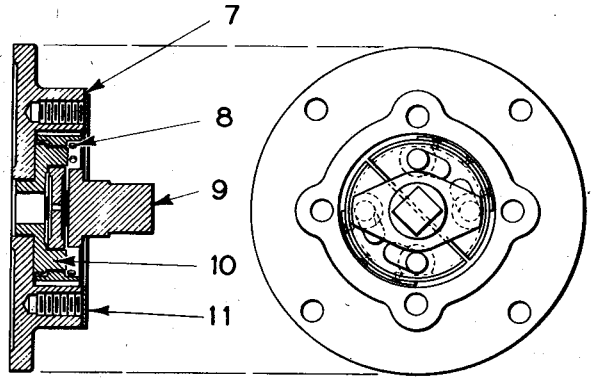

C

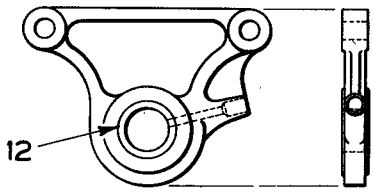

D

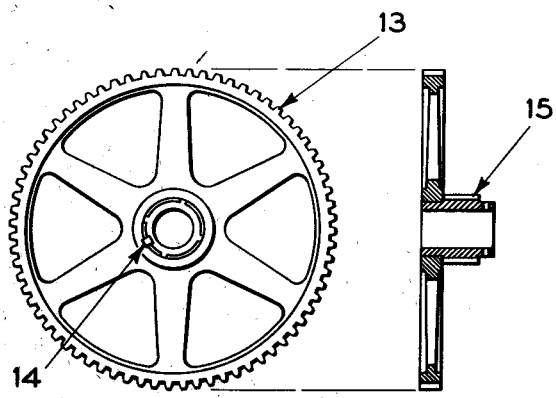

E

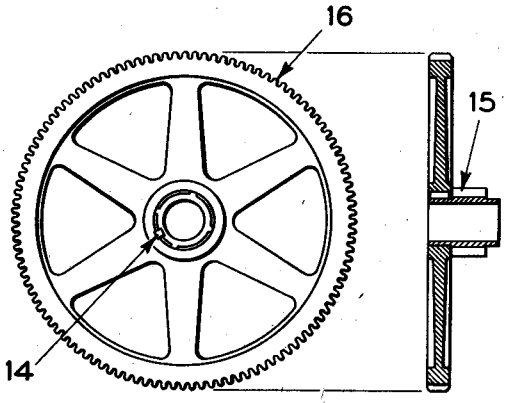

F

DETAIL PARTS FOR MECHANISMS

DETAIL PARTS FOR MECHANISMS

Drawing references are shown for convenience in checking shipping lists and invoices

Fig. No.	Description	Drawing Reference
	Order by plate, figure number and description	
A	Sector Complete, with shaft, for mechanisms shown on Plate G-510.	54240-2 Gr. 1
B	Sector Complete, with shaft, for mechanisms shown on Plates G-512 and G-514.	54240 Gr. 1
C	Brake Complete, as shown, for mechanism shown on Plate G-512.	3562-122
D	Bearing Bracket Complete, with bushing.	29833 Gr. 1
E	First Intermediate Gear Complete, 73 teeth, with pinion having 14 teeth, for mechanisms shown on Plates G-512 and G-514.	29965 Gr. 1
F	First Intermediate Gear Complete, 116 teeth, with pinion having 14 teeth, for mechanism shown on Plate G-510.	29965-1 Gr. 1
1	Sector, only, for sector Fig. A	29830-3
2	Pin, for fastening sector Fig. 1 to shaft Fig. 3. . . .	500
3	Shaft, only, for sector Fig. A	29839-3
4	Sector, only, for sector Fig. B	29830
5	Shaft, only, for sector Fig. B	29839
6	Woodruff Key, for fastening sector Fig. 4 to shaft Fig. 5.	028
7	Case, only, for brake Fig. C.	E2550A
8	Shoe Complete, for brake Fig. C, includes lining and rivets.	E2550B Gr. 1
9	Driver, only, for brake Fig. C	E2550F
10	Driver, only, for brake Fig. C	E2550E
11	Gasket, for brake Fig. C	3562-38
12	Bushing, for bearing bracket	29836
13	Gear, only, 73 teeth, for gear Fig. E	29832
14	Key, 3/16" x 3/16" x 1/2", for fastening gears Figs. 13 and 16 to pinions	29848
15	Pinion, only, 14 teeth, for gears Figs. E and F. . . .	29841
16	Gear, only, 116 teeth, for gear Fig. F	29832-2

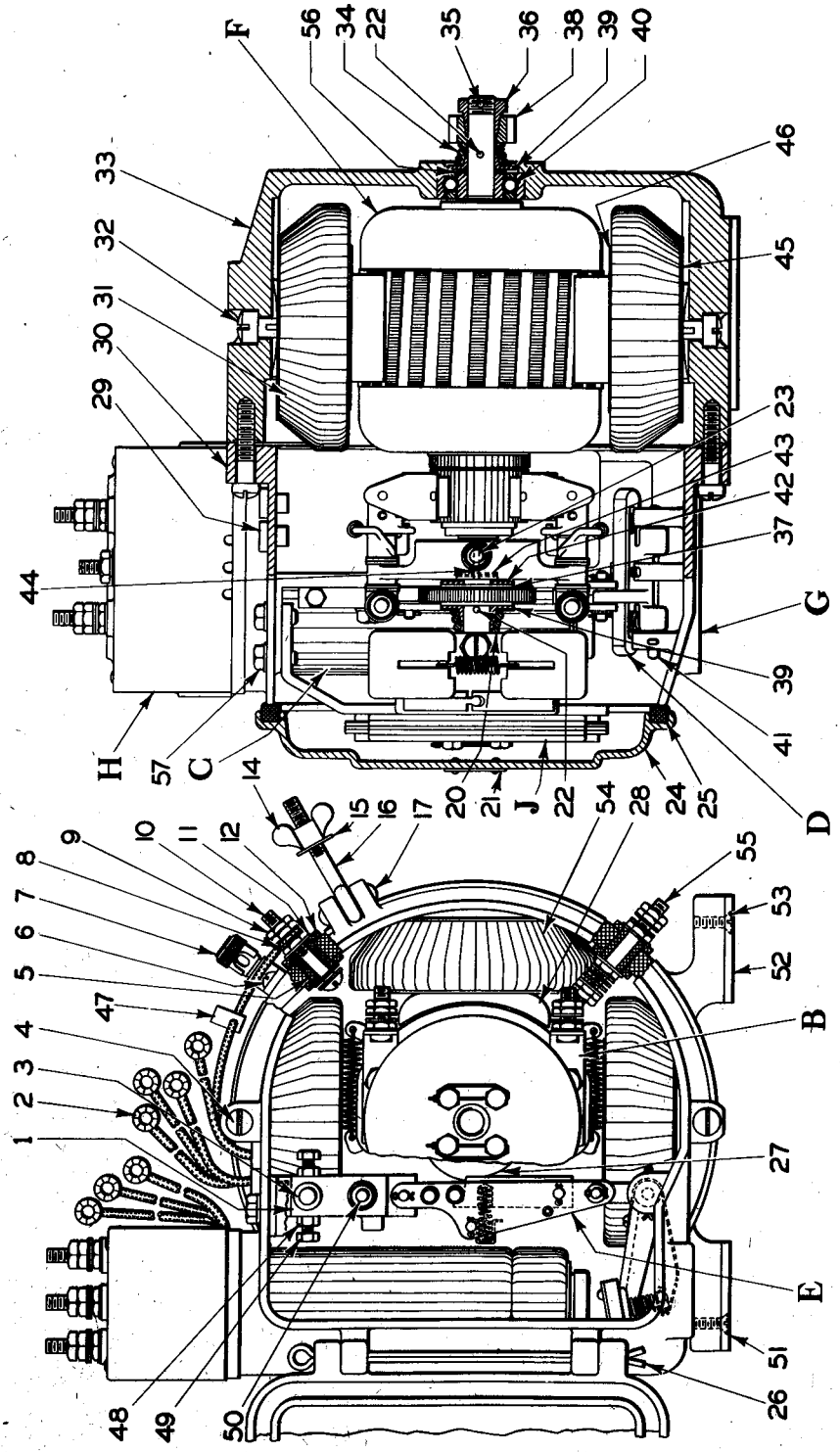
F
56
34
22
35
36
38
39
40
33
32
31
30
29
46
45
23
43
42
37
44
G
39
41
H
57
C
14
20
21
J
22
24
25
D
A
15
16
17
54
28
55
9
10
11
12
8
7
6
5
4
3
2
1
47
53
52
B
27
E
51
26
48
49
50

MOTOR

MOTOR

NOTE:- This motor is equipped with centrifugal brake and has contacts operated by hold-clear armature.

For gates that are power-operated from clear to 45°.

Drawing references are shown for convenience in checking shipping lists and invoices

Fig. No.	Description	Drawing Reference
	Order by plate, figure number and description	
A	Motor Complete, 8-10 volts, direct-current, clockwise rotation, with centrifugal brake, and has contacts operated by hold-clear armature. Has 926 ohms holding coils. For mechanism shown on Plate G-510 Fig. B	29890-5 Gr. 1
A1	as above, except with 560 ohms holding coils	29890-5 Gr. 3
B	Brush Holder Complete. For details and order references see Plate G-536 Fig. B	37930-1 Gr. 7
C	Hold-Clear Magnet Complete. For details and order references see Plate G-538 Fig. C and C1.	
D	Hold-Clear Armature Complete. For details and order references see Plate G-536 Fig. H2	49021 Gr. 8
E	Link Complete. For details and order references see Plate G-536 Fig. F	32666-2 Gr. 1
F	Armature Complete, for motor, includes coil and commutator	29893-6 Gr. 1
G	Bearing Bracket, with cover, gasket, stud for brush holder bracket, hanger block for link, eyebolt, wing nut, pins, nuts and washers. (1-14, 1-15, 1-16, 1-17, 1-23, 1-24, 1-25, 1-26, 1-30, 1-41, and 1-44)	39057-1 Gr. 5
H	Contactor Complete. For details and order references see Plate G-536 Fig. C	57440 Gr. 1
J	Centrifugal Brake Complete. For details and order references see Plate G-538 Fig. D	56795 Gr. 1
1	Hanger Block, for link Fig. E	32886-1
2	Eyelet, for 1/4" and 5/16" posts and No. 14 wire, with clamping ears for 5/16" dia. insulation	17819-4
3	Stud, for fastening hanger block to bearing bracket	441-450
4	Cap Screw, 5/16"-18 x 1-1/4", for fastening bearing bracket to motor frame	50499
5	Bushing, fibre, for binding posts	7350-196
6	Screw, No. 10-32 x 3/8" rd. hd., for mounting oiler	3044-4
7	Oiler Complete, for motor, includes bracket and tube	48674-1 Gr. 2

MOTOR

Drawing references are shown for convenience in checking shipping lists and invoices

Fig. No.	Description	Drawing Reference
	Order by plate, figure number and description	
8	Washer, for binding posts	1225-2
9	Nut, No. 14-24 x 1/8" th. hex., for binding posts, also for mounting brush holder	46989-2
10	Screw, No. 14-24 x 1-3/4" rd. hd., used as binding post in position shown	360-2
11	Washer, for binding post	14682-2
12	Washer, fibre, for binding posts	493-187
14	Wing Nut, for eyebolt	29995
15	Washer, for eyebolt	22890
16	Eyebolt, for cover	29963
17	Pin, for fastening eyebolt to frame	7568
20	Spring, for friction cone Fig. 39	30506-2
21	Name Plate, with escutcheon pins for motor	401-6 0738
22	Pin, for armature shaft	16448
23	Stud, for mounting brush holder	50613-1
24	Cover, only, for case	32662-2
25	Gasket, 2'-8" lg., for cover	47436
26	Cotter Pin, 3/16" x 6-1/4", hinge for cover	35622
27	Hold-Clear Disc, for retaining mechanism	43128-5
28	Pole Piece, for motor	29864
29	Bushing, fibre, for lead wires	27371
30	Bearing Bracket, only, for motor	32661-4
31	Field Coil Complete, for motor, single winding, two required	29999-1 Gr. 13
32	Screw, 3/8"-16 x 1" fil. hd., for mounting pole pieces	19866
33	Frame, only, for motor	29825-2
34	Spring, for pinion end	30506-3
35	Taper Pin, for fastening cone Fig. 36 to pinion end of shaft	18281-1
36	Cone, for pinion	30077-2

MOTOR

Drawing references are shown for convenience in checking shipping lists and invoices

Fig. No.	Description	Drawing Reference
	Order by plate, figure number and description	
37	Washer, fibre, for hold-clear disc Fig. 27	30078
38	Pinion, for shaft	30075-1
39	Cone, for motor pinion and hold-clear disc.	30077
40	Ball Bearing, for shaft, two required.	47790
41	Shaft, for armature support.	32758
42	Cone, for commutator end of shaft	30668
43	Shim Washer, for use between ball bearing and cone	34254
44	Pin, for fastening stud Fig. 23 to bearing bracket	4793-1
45	Washer, for field coils, for use in position shown .	493-65
46	Washer, for field coils, for use in position shown .	493-64
47	Tag, for marking wires. Specify marking required	44983-24
48	Nut, No. 10-32 hex., for screw Fig. 49.	577-8
49	Screw, No. 10-32 x 5/8" hex. hd., for fastening hanger block to stud Fig. 3	13006-16
50	Stud, 1/4"-28, with hex. nut and lock washer, for mounting hanger block	9065-6 1472-6 0510-1
51	Shim, left hand, for use under motor foot.	53879-10
52	Shim, right hand, for use under motor foot.	53879-11
53	Screw, No. 10-32 x 1/2" fl. hd., for fastening shims to motor feet.	6727-8
54	Field Coil Complete, for motor, double winding, two required.	29999-7 Gr. 1
55	Stud, No. 14-24 x 2-1/2", used as binding post . . .	391-2
56	Washer, for use between cone Fig. 39 and ball bearing	626-93
57	Screw, 1/4"-28 x 5/8" hex. hd., with lock washer, for mounting brake unit Fig. J	29757-20 0510-1

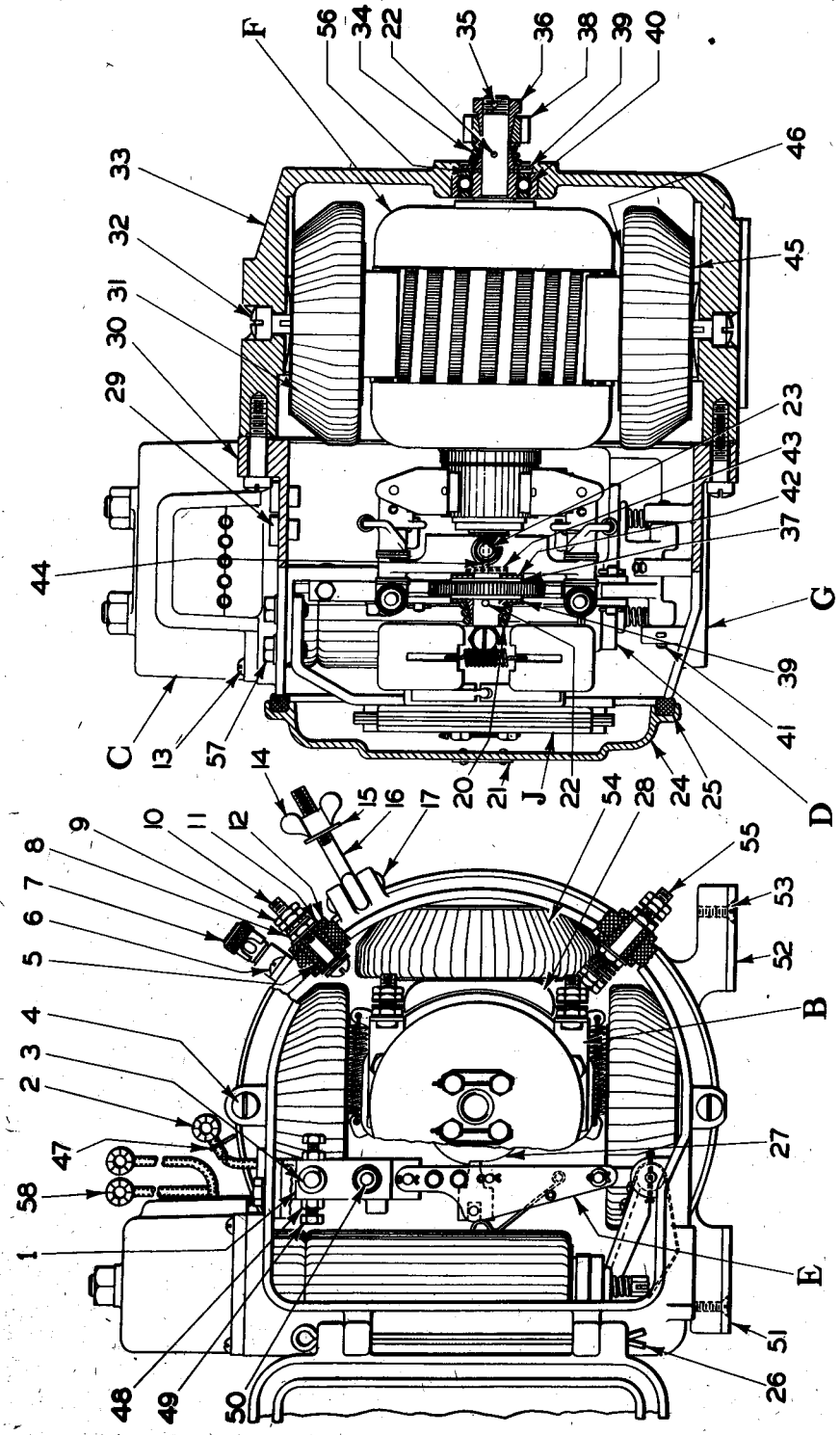
F
56
34
22
35
36
38
39
40
33
32
31
30
29
46
45
23
43
42
37
44
G
39
41
C
13
57
14
20
21
J
22
24
25
D
A
15
16
17
54
28
55
53
52
B
10
11
12
9
8
7
6
5
4
3
2
47
58
1
27
E
51
26
48
49
50

MOTOR

August 1942 WESTERN RAILROAD SUPPLY COMPANY

MOTOR

NOTE:- This motor is equipped with centrifugal brake but without contacts operated by hold-clear armature.

For gates that are power-operated from clear to 45°.

Drawing references are shown for convenience in checking shipping lists and invoices

Fig. No.	Description	Drawing Reference
	Order by plate, figure number and description	
A	Motor Complete, 8-10 volts, direct-current, clockwise rotation, with centrifugal brake but without contacts operated by hold-clear armature. For mechanisms shown on Plate G-510 Fig. A	29890-4 Gr. 1
B	Brush Holder Complete. For details and order references see Plate G-536 Fig. B	37930-1 Gr. 7
C	Hold-Clear Magnet Complete. For details and order references see Plate G-538 Fig. B	49025-2 Gr. 18
D	Hold-Clear Armature Complete. For details and order references see Plate G-536 Fig. H1	49021 Gr. 7
E	Link Complete. For details and order references see Plate G-536 Fig. G	32666-1 Gr. 2
F	Armature Complete, for motor, includes coil and commutator	29893-6 Gr. 1
G	Bearing Bracket, with cover, gasket, stud for brush holder bracket, hanger block for link, eyebolt, wing nut, pins, nuts and washers. (1-14, 1-15, 1-16, 1-17, 1-23, 1-24, 1-25, 1-26, 1-30, 1-41, and 1-44).. . . .	39057-1 Gr. 5
J	Centrifugal Brake Complete. For details and order references see Plate G-538 Fig. D	56795 Gr. 1
1	Hanger Block, for link Fig. E.	32686-1
2	Eyelet, for 1/4" and 5/16" posts and No. 14 wire, with clamping ears for 5/16" dia. insulation	17819-4
3	Stud, for fastening hanger block to bearing bracket	441-450
4	Cap Screw, 5/16"-18 x 1-1/4", for fastening bearing bracket to motor frame.	50499
5	Bushing, fibre, for binding posts.	7350-196
6	Screw, No. 10-32 x 3/8" rd. hd., for mounting oiler	3044-4
7	Oiler Complete, for motor, includes bracket and tube.	48674-1 Gr. 2
8	Washer, for binding posts	1225-2

MOTOR

Drawing references are shown for convenience in checking shipping lists and invoices

Fig. No.	Description	Drawing Reference
	Order by plate, figure number and description	
9	Nut, No. 14-24 x 1/8" th. hex., for binding posts, also for mounting brush holder.	46989-2
10	Screw, No. 14-24 x 1-3/4" rd. hd., used as binding post in position shown.	360-2
11	Washer, for binding post.	14682-2
12	Washer, fibre, for binding posts.	493-187
13	Screw, No. 8-32 x 1-1/2" rd. hd., for mounting hold-clear magnet	2430
14	Wing Nut, for eyebolt	29995
15	Washer, for eyebolt	22890
16	Eyebolt, for cover	29963
17	Pin, for fastening eyebolt to frame	7568
20	Spring, for friction cone Fig. 39.	30506-2
21	Name Plate, with escutcheon pins for motor.	401-6 0738
22	Pin, for armature shaft.	16448
23	Stud, for mounting brush holder	50613-1
24	Cover, only, for case	32662-2
25	Gasket, 2'-8" lg., for cover.	47436
26	Cotter Pin, 3/16" x 6-1/4", hinge for cover	35622
27	Hold-Clear Disc, for retaining mechanism.	43128-3
28	Pole Piece, for motor.	29864
29	Bushing, fibre, for lead wires	27371
30	Bearing Bracket, only, for motor	32661-4
31	Field Coil Complete, for motor, single winding, two required.	29999-1 Gr. 13
32	Screw, 3/8"-16 x 1" fil. hd., for mounting pole pieces	19866
33	Frame, only, for motor.	29825-2
34	Spring, for pinion end.	30506-1
35	Taper Pin, for fastening cone Fig. 36 to pinion end of shaft	18281-1

MOTOR

Drawing references are shown for convenience in checking shipping lists and invoices

Fig. No.	Description	Drawing Reference
	Order by plate, figure number and description	
36	Cone, for pinion.	30077-2
37	Washer, fibre, for hold-clear disc Fig. 27	30078
38	Pinion, for shaft	30075-1
39	Cone, for motor pinion and hold-clear disc.	30077
40	Ball Bearing, for shaft, two required.	47790
41	Shaft, for armature support.	32758
42	Cone, for commutator end of shaft	30668
43	Shim Washer, for use between ball bearing and cone	34254
44	Pin, for fastening stud Fig. 23 to bearing bracket .	4793-1
45	Washer, for field coils, for use in position shown .	493-65
46	Washer, for field coils, for use in position shown .	493-64
47	Tag, for marking wires. Specify marking required	44983-24
48	Nut, No. 10-32 hex., for screw Fig. 49.	577-8
49	Screw, No. 10-32 x 5/8" hex. hd., for fastening hanger block to stud Fig. 3	13006-16
50	Stud, 1/4"-28, with hex. nut and lock washer, for mounting hanger block	9065-6 1472-6 0510-1
51	Shim, left hand, for use under motor foot.	53879-10
52	Shim, right hand, for use under motor foot.	53879-11
53	Screw, No. 10-32 x 1/2" fl. hd., for fastening shims to motor feet.	6727-8
54	Field Coil Complete, for motor; double winding, two required.	29999-7 Gr. 1
55	Stud, No. 14-24 x 2-1/2", used as binding post . . .	391-2
56	Washer, for use between cone Fig. 39 and ball bearing	626-93
57	Screw, 1/4"-28 x 5/8" hex. hd., with lock washer, for mounting brake unit Fig. J	29757-20 0510-1
58	Eyelet, for 1/4" and 5/16" posts and No. 14 wire, has clamping ears for 3/16" dia. insulation	17819-3

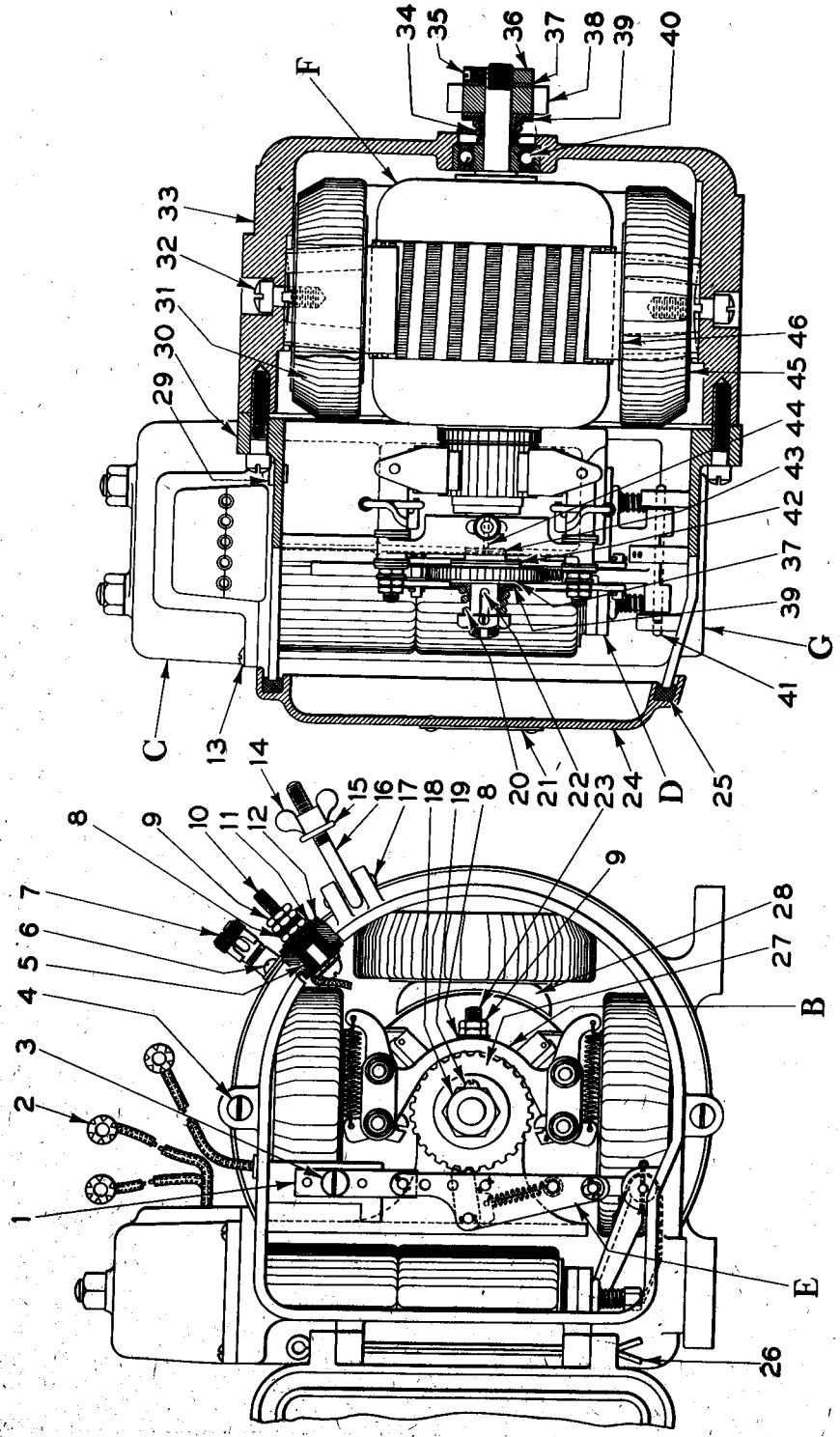
34
35
36
37
38
39
40
F
33
32
31
30
29
46
45
44
43
42
37
39
G
41
C
13
14
15
16
17
18
19
8
20
21
22
23
24
D
25
A
8
9
10
11
12
7
6
5
4
3
2
1
9
28
27
B
E
26

MOTOR

MOTOR

NOTE:- This motor is not equipped with centrifugal brake or with contacts operated by hold-clear armature.

For gates that are operated by gravity from clear to 0.

Drawing references are shown for convenience in checking shipping lists and invoices

Fig. No.	Description	Drawing Reference
	Order by plate, figure number and description	
A	Motor Complete, 8-10 volts, direct-current, clockwise or counter-clockwise rotation. For mechanisms shown on Plates G-512 and G-514	29890-1 Gr. 12
B	Brush Holder Complete. For details and order references see Plate G-536 Fig. A	37930-1 Gr. 5
C	Hold-Clear Magnet Complete. For details and order references see Plate G-538 Fig. A	49025-2 Gr. 15
D	Hold-Clear Armature Complete. For details and order references see Plate G-536 Fig. H	49021 Gr. 5
E	Link Complete. For details and order references see Plate G-536 Fig. D or E	32666
F	Armature Complete, for motor, includes coil and commutator	29893-1 Gr. 4
G	Bearing Bracket, with cover, gasket, stud for brush holder bracket, hanger block for link, eyebolt, wing nut, pins, nuts and washers. (1-14, 1-15, 1-16, 1-17, 1-23, 1-24, 1-25, 1-26, 1-30, 1-41, and 1-44). . . .	39057-1 Gr. 1
1	Hanger Block, for link Fig. E.	32686
2	Eyelet, for 1/4" post, takes No. 14, 16 or 18 wire .	41858
3	Screw, No. 14-24 x 1/2" fl. hd., for fastening hanger block to bearing bracket	5263-1
4	Cap Screw, 5/16"-18 x 1-1/4", for fastening bearing bracket to motor frame.	50499
5	Bushing, fibre, for binding posts.	7350-196
6	Screw, No. 10-32 x 3/8" rd. hd., for mounting oiler	3044-4
7	Oiler Complete, for motor, includes bracket and tube.	48674-1 Gr. 2
8	Washer, for binding posts	1225-2
9	Nut, No. 14-24 x 1/8" th. hex., for binding posts, also for mounting brush holder.	46989-2
10	Screw, No. 14-24 x 1-3/4" rd. hd., used as binding post.	360-2

MOTOR

Drawing references are shown for convenience in checking shipping lists and invoices

Fig. No.	Description	Drawing Reference
	Order by plate, figure number and description	
11	Washer, for binding posts	14682-2
12	Washer, fibre, for binding posts	493-187
13	Screw, No. 8-32 x 1-1/2" rd. hd., for mounting hold-clear magnet	2430
14	Wing Nut, for eyebolt	29995
15	Washer, for eyebolt	22890
16	Eyebolt, for cover	29963
17	Pin, for fastening eyebolt to frame	7568
18	Nut, 1/2"-24 x 1/4" th. hex., for commutator end of shaft	30032
19	Screw, No. 6-32 x 3/8" rd. hd., for locking nut Fig. 18 to shaft	2552
20	Spring, for friction cone Fig. 39	30506-2
21	Name Plate, with escutcheon pins, for motor	401-6 0738
22	Pin, for armature shaft	16448
23	Stud, for mounting brush holder	50613-1
24	Cover, only, for case	32662
25	Gasket, 2'-8" lg., for cover	47436
26	Cotter Pin, 3/16" x 6-1/4", hinge for cover	35622
27	Hold-Clear Disc, for retaining mechanism	32685
28	Pole Piece, for motor	29864
29	Bushing, fibre, for lead wires	27371
30	Bearing Bracket, only, for motor	32661
31	Field Coil Complete, for motor, four required	29999-1 Gr. 1
32	Screw, 3/8"-16 x 1" fil. hd., for mounting pole pieces	19866
33	Frame, only, for motor	29825
34	Spring, for pinion end	30506-3
35	Screw, No. 10-32 x 1/4" dog pt., for locking collar Fig. 36 to shaft	3018-28

MOTOR

Drawing references are shown for convenience in checking shipping lists and invoices

Fig. No.	Description	Drawing Reference
	Order by plate, figure number and description	
36	Collar, for end of shaft	30650-2
37	Washer, fibre, for hold-clear disc Fig. 27 and pinion	30078
38	Pinion, for shaft	30075
39	Cone, for motor pinion and hold-clear disc	30077
40	Ball Bearing, for shaft, two required	47790
41	Shaft, for armature support	32758
42	Cone, for commutator end of shaft	30668
43	Shim Washer, for use between ball bearing and cone	34254
44	Pin, for fastening stud Fig. 23 to bearing bracket	4793-1
45	Washer, for field coils, for use in position shown	493-65
46	Washer, for field coils, for use in position shown	493-64

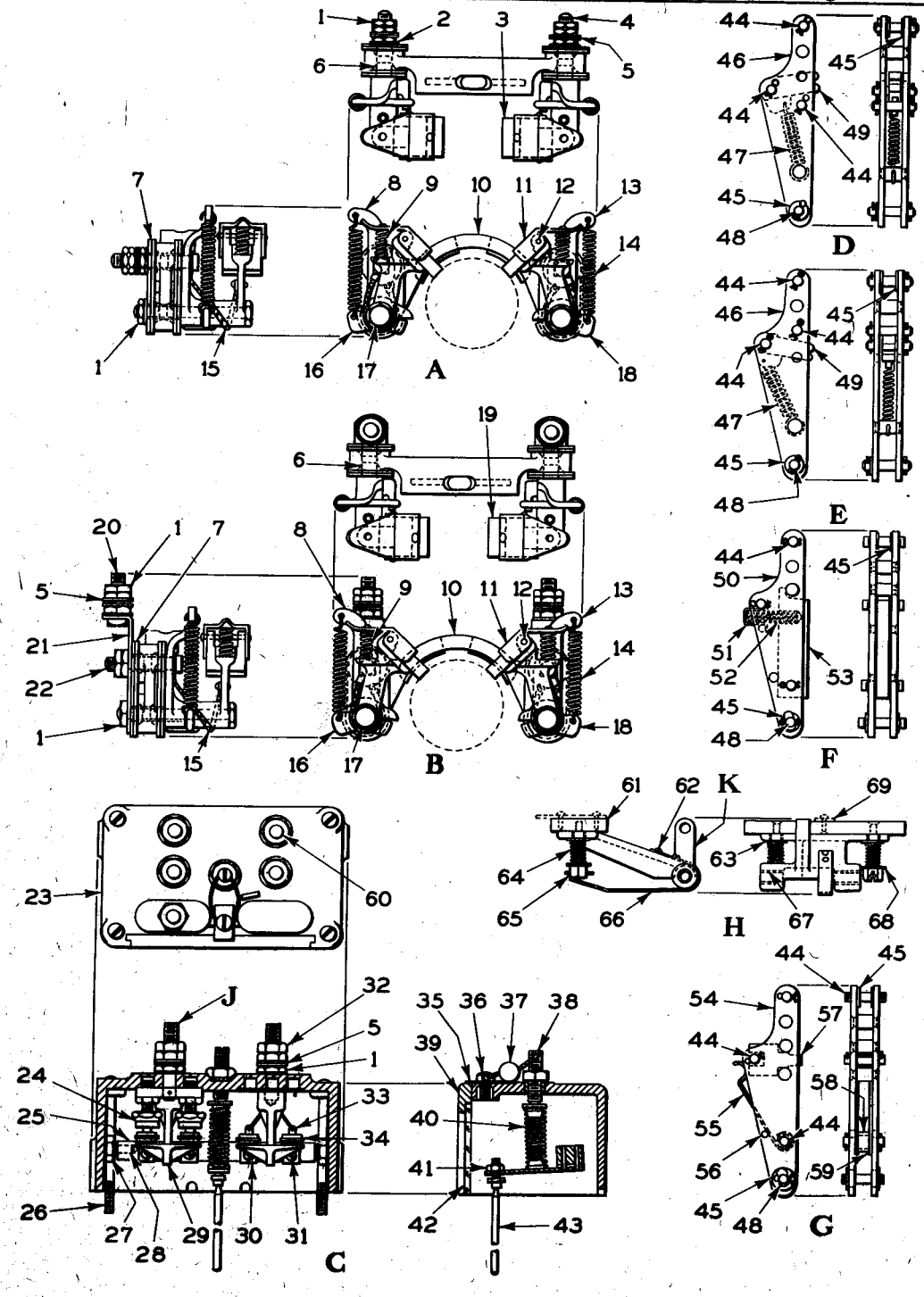

DETAIL PARTS FOR MOTORS

DETAIL PARTS FOR MOTORS

Drawing references are shown for convenience in checking shipping lists and invoices

Fig. No.	Description	Drawing Reference
	Order by plate, figure number and description	
A	Brush Holder Complete, for motor as shown on Plate G-534	37930-1 Gr. 5
B	Brush Holder Complete, for motors as shown on Plates G-530 and G-532	37930-1 Gr. 7
C	Contactor Complete, for motor as shown on Plate G-530	57440 Gr. 1
D	Link Complete, for clockwise rotation, for motor as shown on Plate G-534	32666 Gr. 3
E	Link Complete, for counter-clockwise rotation, for motor as shown on Plate G-534	32666 Gr. 4
F	Link Complete, for motor as shown on Plate G-530	32666-2 Gr. 1
G	Link Complete, for motor as shown on Plate G-532	32666-1 Gr. 2
H	Armature Support Complete, for motor as shown on Plate G-534	49021 Gr. 5
H1	as above, except for motor as shown on Plate G-532	49021 Gr. 7
H2	same as Fig. H, except with plate Fig. 69 as shown by dotted lines, for motor as shown on Plate G-530	49021 Gr. 8
J	Contact Complete, includes screw, plate and contacts	57441 Gr. 1
K	Armature Support Complete, includes support, screws Fig. 62, spring Fig. 66, and bushings Fig. 67	33249 Gr. 5
1	Nut, No. 14-24 x 1/8" th. hex., for terminal posts, also for screws Figs. 17 and 22	46989-2
2	Washer, for terminal posts	14682
3	Brush, only, for brush holder Fig. A	37938-9
4	Screw, No. 14-24 x 1 5/8" sq. hd., for brush holder Fig. A	350-4
5	Washer, for terminal posts	1225-2
6	Bushing, for screws Figs. 4, 17 and 22	37976-3
7	Link, for brush holders Figs. A and B	35505-40
8	Arm, lower, for brush holders	37931
9	Spring, for brush holders	37974
10	Bracket, only, for brush holders	37937-1

DETAIL PARTS FOR MOTORS

Drawing references are shown for convenience in checking shipping lists and invoices

Fig. No.	Description	Drawing Reference
	Order by plate, figure number and description	
11	Cap Complete, for brush holders, includes stud for spring	50808 Gr. 1
12	Pin, for fastening cap to lever	18142
13	Arm, upper, for brush holders	37932
14	Spring, for arms Figs. 8 and 13	37936
15	Connector, for brush holders	42760-4 Gr. 1
16	Lever, lower, for brush holders	37933
17	Screw, No. 14-24, for brush holders	37939-1
18	Lever, upper, for brush holders	37934
19	Brush, only, for brush holder Fig. B	37938-7
20	Screw, No. 14-24 x 7/8" sq. hd., for brush holder Fig. B	350-14
21	Connector, for brush holder Fig. B	46413-6
22	Screw, No. 14-24 x 1-1/4" sq. hd., for brush holder Fig. B	350-1
23	Case, only, for contactor	57443
24	Contact, only, for contactor	42799-7 Gr. 13
25	Bar Complete, includes plate and spring seat	57252 Gr. 1
26	Screw, No. 8-32 x 2-1/2" fil. hd., for mounting contactor	28989-42
27	Nut, 1/4"-28 x 1/8" th. hex., for trunnion screw Fig. 28	1472-8
28	Trunnion Screw, 1/4"-28, bearing for bar Fig. 25	49522-20
29	Lower Contact Complete, as shown, includes screw, support and contact	57444 Gr. 1
30	Stop, for contact Fig. 29	35470-48
31	Screw, No. 5-40 x 3/4" fil. hd., with hex. nut and lock washer, for fastening stop and connector to bar Fig. 25	28876-4 54743-1 53029-26
32	Nut, No. 14-24 x 3/16" th. hex., for terminal posts	42839-5
33	Connector Complete, for contactor	42760-105 Gr. 1
34	Contact Complete, for contactor, includes spring and contacts	13062-20 Gr. 1

DETAIL PARTS FOR MOTORS

Drawing references are shown for convenience in checking shipping lists and invoices

Fig. No.	Description	Drawing Reference
	Order by plate, figure number and description	
35	Washer, for holding bar Fig. 39 in place	43083-6
36	Screw, No. 10-32 x 5/16" fil. hd., for washer Fig. 35	34456-5
37	Car Seal, for contactor	35285
38	Screw, No. 14-24, for spring Fig. 40	50313-3
39	Bar, for holding glass	57454
40	Spring, for bar Fig. 25	586-133
41	Nut, 1/8"-56 x 1/8" th. hex., for rod Fig. 43	12680-5
42	Glass, only, for contactor	56061-13
43	Rod Complete, includes stud, for operating contactor	57251 Gr. 1
44	Pin, for links Figs. D, E, F and G	504-84
45	Washer, for pins Figs. 44 and 48	42312
46	Link Complete, for links Figs. D and E, includes spacers	32659
47	Spring, for dog Fig. 49	33203-1
48	Pin, for links Figs. D, E, F and G	38495
49	Dog, only, for links Figs. D and E	32728
50	Link Complete, for link Fig. F, includes spacers and pin	32659-2 Gr. 1
51	Clip, for spring Fig. 52	30645-6
52	Spring, for dog Fig. 53	586-141
53	Dog, only, for link Fig. F	43650-3
54	Link Complete, for link Fig. G, includes spacers	32659-1 Gr. 1
55	Spring, for dog Fig. 57	43651
56	Pin, 1/8" x 5/8", for spring Fig. 55	721
57	Dog, only, for link Fig. G	43650-2
58	Bushing, for pins	6714-241
59	Washer, for bushing Fig. 58	50587
60	Screw, No. 14-24 x 1-1/4" sq. hd., used as terminal post for contactor	350-1

DETAIL PARTS FOR MOTORS

Drawing references are shown for convenience in checking shipping lists and invoices

Fig. No.	Description	Drawing Reference
	Order by plate, figure number and description	
61	Armature Complete, includes studs for springs Fig. 64, for armature supports Figs. H and H1 . . .	49020
61a	as above, except with plate and rivet Fig. 69, for armature support Fig. H2	49020-3 Gr. 1
62	Screw, No. 6-32 x 1/4" rd. hd., for fastening spring Fig. 66 to support	2613
63	Washer, for springs Fig. 64, for armature support Fig. H only	5046
64	Spring, 5/8" lg., for armature support Fig. H. . . .	33209-1
64a	as above, except 7/8" lg., for armature supports Figs. H1 and H2.	786-203
64b	same as Fig. 64, except 13/32" lg.	786-198
65	Nut, castle, No. 10-32 hex., for studs on armature	33247
66	Spring, for armature support.	33200
67	Bushing, for armature support.	6714-234
68	Eyelet, for studs on armature	49890
69	Plate, with rivet, for armature support Fig. H2. . .	35845-90 33172-13

MEMORANDUM

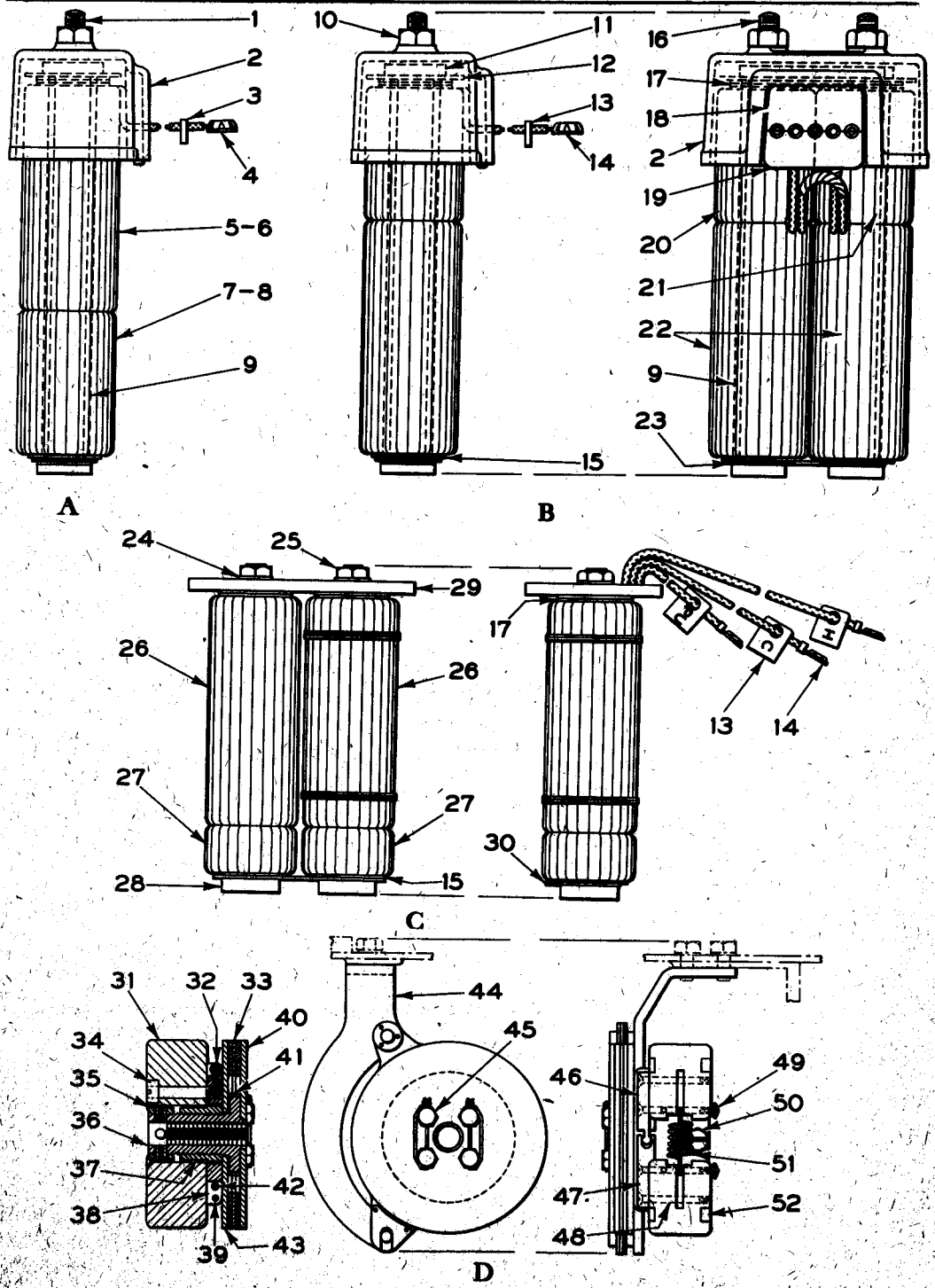

DETAIL PARTS FOR MOTORS

DETAIL PARTS FOR MOTORS

Drawing references are shown for convenience in checking shipping lists and invoices

Fig. No.	Description	Drawing Reference
	Order by plate, figure number and description	
A	Hold-Clear Magnet Complete, for 8-10 volt, d-c. motor, as shown on Plate G-534	49025-2 Gr. 15
B	Hold-Clear Magnet Complete, for 8-10 volt, d-c. motor, as shown on Plate G-532	49025-2 Gr. 18
C	Hold-Clear Magnet Complete, with 926 ohm holding coils, for 8-10 volt, d-c. motor, as shown on Plate G-530 Fig. A	49025-3 Gr. 1
C1	as above, except with 560 ohm holding coils, for motor, as shown on Plate G-530 Fig. A1	49025-3 Gr. 4
D	Centrifugal Brake Complete, as shown, for motors shown on Plates G-530 and G-532	56795 Gr. 1
1	Core Complete, for magnet Fig. A. Includes cap and pin	49022-1 Gr. 2
2	Cap, for magnets Figs. A and B	33204-1
3	Tag, for magnet Fig. A	34558
4	Eyelet, for magnet Fig. A, for 1/4" post, takes No. 14, 16 or 18 wire	41858
5	Coil, holding, 320 ohms, for magnet Fig. A, inside lead 3-1/2" lg., outside lead 3-1/2" lg	50623 Gr. 1
5a	as above, except 430 ohms	50623 Gr. 5
6	Coil, holding, 320 ohms, for magnet Fig. A, inside lead 3-1/2" lg., outside lead 17" lg	50623 Gr. 2
6a	as above, except 430 ohms	50623 Gr. 6
7	Coil, pickup, 8.3 ohms, for magnet Fig. A, inside lead 2'-9 1/2" lg., outside lead 3-1/2" lg	50622 Gr. 2
8	Coil, pickup, 8.3 ohms, for magnet Fig. A, inside lead 3-1/2" lg., outside lead 14-1/2" lg	50622 Gr. 1
9	Tube, for cores on magnets Figs. A and B.	50624
10	Nut, 3/8"-16 x 11/16" th. hex., for cores	1156
11	Yoke, for cores	48844
12	Insulator, for yoke	49836
13	Tag, for magnets Figs. B and C.	44983-24
14	Eyelet, for magnets Figs. B and C, for 1/4" and 5/16" posts and No. 14 wire, has clamping ears for 3/16" dia. insulation	17819-3
15	Washer, for bottom of coils	17546

DETAIL PARTS FOR MOTORS

Drawing references are shown for convenience in checking shipping lists and invoices

Fig. No.	Description	Drawing Reference
	Order by plate, figure number and description	
16	Core Complete, for magnet Fig. B. Includes cap and pin.	49022-1 Gr. 3
17	Felt Washer, for top of coils	1533-15
18	Block, upper half, for wires.	49834-1
19	Block, lower half, for wires.	49835-1
20	Coil, pickup, 13.1 ohms, for magnet Fig. B, inside lead 3-1/2" lg., outside lead 14-1/2" lg.	50625 Gr. 1
21	Coil, pickup, 13.1 ohms, for magnet Fig. B, inside lead 3-1/2" lg., outside lead 2'-0 1/2" lg.	50625 Gr. 2
22	Coil, holding, 280 ohms, for magnet Fig. B, inside lead 17" lg., outside lead 3-1/2" lg.	50626 Gr. 12
23	Link, for cores	38496
24	Lock Washer, for nut Fig. 25.	42175
25	Nut, 3/8"-16 x 3/16" th. hex., for core Fig. 28 . . .	35519
26	Coil, holding, 463 ohms, for magnet Fig. C	50626-1 Gr. 1
26a	as above, except 280 ohms, for magnet Fig. C1 . . .	50626-1 Gr. 4
27	Coil, pickup, 13.8 ohms, for magnet Fig. C and C1 .	50625-1 Gr. 1
28	Core Complete, for magnet Fig. C and C1. Includes cap and pin	49022-2 Gr. 1
29	Yoke, for cores	48844-1
30	Plate, for bottom of magnet Fig. C and C1, ...	35845-91
31	Weight, for brake	53113-3
32	Roller, for brake	31942-56
33	Disc Complete, includes friction discs and jaw. . . .	56786 Gr. 1
34	Nut, 1/4"-28, rd., for studs on plate Fig. 38	35281-6
35	Collar, for sleeve Fig. 36	420-41
36	Sleeve, for motor shaft	585-37
37	Spider, for brake	56618
38	Plate Complete, includes studs, for brake.	56994 Gr. 1
39	Pin, 1/8" x 1-31/64", for rollers Fig. 32	500-9
40	Disc, for brake.	39719-28
41	Spring, for brake	786-200

DETAIL PARTS FOR MOTORS

Drawing references are shown for convenience in checking shipping lists and invoices

Fig. No.	Description	Drawing Reference
	Order by plate, figure number and description	
42	Pin, 5/32" x 1-31/32", for plate Fig. 38.	500-10
43	Disc, for brake	39719-30
44	Hanger Complete, includes two studs, for brake . .	56993 Gr. 1
45	Screw, 1/4"-28 x 3/4", hex. hd., for fastening discs to brake	30049-6
46	Lever, as shown, for brake	56615
47	Lever, as shown, for brake	56616
48	Screw, No. 8-32 x 1-17/32", fl. hd., for fastening levers Figs. 46 and 47 to brake	18746-19
49	Pin, for spring Fig. 51	34262-2
50	Screw, 1/4"-28 x 7/16", hex. hd., with lock nut, for locking brake unit to motor shaft	30049-7 1472-8
51	Spring, for weights.	1581-26
52	Block, for weights	17745-12

MEMORANDUM

MEMORANDUM

W
RRS